DRAWING NUMBER: HES113JCAERO2099

F	E	D	C	B	A	DRW REVISION	
			REVISION	REVISION	INITIAL REVISION	REVISION DSC	CHANGES
			SEE ECN	19 SEP 2022	26 MAY 2022	REVISION DATE	

INTERIOR PLACARDS ILLUSTRATED CATALOGUE

TABLE OF CONTENT:

	SHEET
TABLE 1. LIST OF APPLICABLE AIRCRAFTS	1
1. INTRODUCTION	2
2. GENERAL NOTES	2
3. PLACARD MANUFACTURING	3
4. PLACARD COLORS	3
5. LETTERING	3
6. PART NUMBER AND "EPA" MARKING	3
7. PLACARD INSTALLATION	4
8. TYPICAL INTERIOR PLACARD INSTALLATION LAYOUT AND LIST OF ITEMS NUMERIC INDEX	5-63
9. TYPICAL EMERGENCY EQUIPMENT PLACARD INSTALLATION LAYOUT AND LIST OF ITEMS NUMERIC INDEX	64-83
10. TYPICAL LAVATORY PLACARD INSTALLATION LAYOUT AND LIST OF ITEMS NUMERIC INDEX	84-93
11. KIT INDENTIFICATION TABLE	94-98

TABLE 1. APPLICABLE MSN LIST

MODEL	EFFECTIVITY MSN	SERIAL NO.
AIRBUS A320-232	02210; 02157; 03275	003 [HST] 001 [HST] 002 [HST]
AIRBUS A320-214	02388; 03596	051 [HST] 051[JAV]

A/C MODEL: AIRBUS A320

J&C AERO EEU

EASA APPROVAL NO: EASA.21J.580

WWW.THISISDOA.EU
INFO@THISISDOA.EU
PHONE: +353 15 269768

AIRCRAFT: SEE TABLE 1	TOLERANCES: OVERALL PLACARD DIMENSIONS ±1MM: RADIUS ±1MM: LETTERING/GRAPHIC DIMENSIONS +1.0/-0.5 MM: INSTALLATION ±4MM: ANGULAR ±5°.			DRAWN BY: SEE JCAERO/ECN/2099
MSN: SEE TABLE 1	REGISTRATION: -	SCALE: NTS	SIZE: A2	ALL DIMENSIONS ARE MILLIMETERS THIRD ANGLE PROJECTION	CHECKED BY: SEE JCAERO/ECN/2099
TITLE: INTERIOR PLACARDS ILLUSTRATED CATALOGUE				
DRAWING NUMBER: HES113JCAERO2099			SHEET 1 OF 98	REV. C

© J&C AERO EEU LTD. OWN THE COPYRIGHT OF THIS DRAWING AND IT SHALL NOT BE REPRODUCED BY ANY OTHER WITHOUT THE PRIOR WRITTEN PERMISSION

DOC/302 ISSUE 1.0

1. INTRODUCTION

1.1 THIS INTERIOR PLACARD ILLUSTRATED CATALOGUE IS VALID FOR THE HESTON AIRLINES AIRBUS A320 AIRCRAFT AS DEFINED IN TABLE 1.

1.2 THE INTERIOR PLACARDS INTRODUCED IN THIS INTERIOR PLACARD ILLUSTRATED CATALOGUE ARE ALTERNATIVE TO THE TC HOLDER INTERIOR PLACARDS.

1.3 THIS INTERIOR PLACARD ILLUSTRATED CATALOGUE INTRODUCES MANUFACTURING OF INTERIOR PLACARDS, REFER TO PARAGRAPH "3. PLACARD MANUFACTURING".

1.4 THIS INTERIOR PLACARD ILLUSTRATED CATALOGUE SHOWS TYPICAL LOCATION OF INTERIOR PLACARDS, HOWEVER THIS DRAWING DOES NOT APPROVE INTERIOR PLACARD INSTALLATION IN SPECIFIED LOCATIONS. THE INTRODUCED INTERIOR PLACARDS MUST BE INSTALLED FOR EACH AIRCRAFT IN ACCORDANCE WITH CUSTOMIZED DOCUMENTS:

- IPC;
- AMM;
- TC HOLDER DWG;
- CMM;
- SB;
- EASA PART 21J ORGANISATION APPROVED MODIFICATION;
- LATEST APPROVED EMERGENCY EQUIPMENT LAYOUT;
- LATEST APPROVED PASSENGER ACCOMMODATION LAYOUT (LOPA).

1.5 DRAWING IS INTENDED TO BE A GUIDELINE FOR ALTERNATIVE INTERIOR PLACARDS PART NUMBER WITH REFERENCE TO TC HOLDER APPROVED PLACARDS PART NUMBER AND TYPICAL DESIGNATION ONLY.

2. GENERAL NOTES

2.1 INSTALLATION OF INTERIOR PLACARDS ONLY IN ACCORDANCE WITH AIRBUS A320 CUSTOMIZED DOCUMENTS: AMM 11-00-00 AND AIPC 11-00-00, AIRBUS ENGINEERING DRAWINGS, SERVICE BULLETINS, EASA PART 21J ORGANISATION APPROVED MODIFICATION , UNLESS OTHERWISE STATED.

2.2 INSPECT & CHECK PLACARDS BEFORE INSTALLATION.

2.3 INSTALL EMERGENCY EQUIPMENT PLACARDS ADJACENT TO EACH PIECE OF EMERGENCY EQUIPMENT REFER TO AFFECTED AIRBUS A320 AIPC AND LATEST APPROVED EMERGENCY EQUIPMENT LAYOUT.

2.4 PERFORM A DIMENSIONAL CHECK BY EVALUATING SIZES OF EACH ITEM USING INDICATED DIMENSIONS IN DRAWING NO. HES113JCAERO2099.

2.5 READ AND RECORD THE DIMENSIONS FOR THE ATTRIBUTE(S) MEASURED USING THE SAME NUMBER OF SIGNIFICANT DIGITS SPECIFIED BY THE DRAWING, STANDARD, OR SPECIFICATION AS A MINIMUM OR MAXIMUM LIMITING VALUE.

2.6 QUANTITY PER AIRCRAFT MAY VARY DUE TO AIRCRAFT CONFIGURATION.

2.7 IF CUSTOMER PREFERS TO TRANSMIT THE PLACARDS PRODUCTION TO POA, J&C AERO EEU LTD. SHOULD BE INFORMED TO ARRANGE DOA/POA ARRANGEMENT DOCUMENT.

2.8 THE PLACARD PARAMETERS SHOWN WITHIN THIS DRAWING ARE NOT CUSTOMISABLE. PARAMETERS:

- PHYSICAL SIZE AND SHAPE;
- THE LETTER FONT TYPE AND SIZE, GRAPHIC SIZE, COLOR AND BACKGROUND COLOR;
- MATERIALS AND MATERIALS COMBINATION.

2.9 PLACARD PRINTING PROCESS INTRODUCED IN THIS DRAWING IS NOT CUSTOMIZABLE, ONLY SPECIFIED PRINTING METHOD AND INKS CAN BE USED. FOR PRINTING METHOD REFER TO PARAGRAPH "3. PLACARD MANUFACTURING".

2.10 PLACARDS MUST BE EPA PART MARKED AS DEFINED IN EASA PART 21 IAW 21.A.804(a).

2.11 THE PLACARD MATERIAL MUST COMPLY WITH THE REQUIREMENTS OF CS 25.853(a) APPENDIX F PART 1(a)(1)(ii) & (b)(4).

2.12 FOR MATERIAL USED TO MANUFACTURE PLACARDS REFER TO PARAGRAPH "3. PLACARD MANUFACTURING".

2.13 FOR PLACARD COLOR DETAILS REFER TO PARAGRAPH "4. PLACARD COLORS".

2.14 FOR LETTERING FONT TYPE REFER TO PARAGRAPH "5. LETTERING".

2.15 FOR PLACARD PART NUMBER BUILD-UP REFER TO PARAGRAPH "6. PART NUMBER AND EPA MARKING".

2.16 FOR PLACARD TYPICAL INSTALLATION INSTRUCTIONS REFER TO PARAGRAPH "7. PLACARD INSTALLATION".

2.17 FOR EASA REQUIRED PLACARDS AND MARKINGS (MANDATORY PLACARDS) REFER TO DOCUMENT REF. NO. AIRBUS A320 BROCHURE - PASSENGER AND CREW PLACARDS AND ILLUMINATED SIGNS DOC. NO. D11M14004295.

2.18 UNLESS OTHERWISE STATED, ALL DIMENSIONS ARE IN MILIMETERS.

© J&C AERO EEU LTD. OWN THE COPYRIGHT OF THIS DRAWING AND IT SHALL NOT BE REPRODUCED BY ANY OTHER WITHOUT THE PRIOR WRITTEN PERMISSION

3. PLACARD MANUFACTURING

3.1 PLACARDS TO BE DIGITAL PRINTED AND CUT TO SIZE AS FOLLOWING:

A) IDENTIFY DEFECTIVE OEM PLACARD PART NUMBER AND ALTERNATIVE PLACARD PART NUMBER IN PARAGRAPH 8; 9; 10 ITEM TABLES;
B) DESIGN PLACARD LAYOUT PER SPECIFIED DIMENSIONS AND PLACARD LAYOUT INTRODUCED IN PARAGRAPHS 8; 9; 10;
C) IDENTIFY PLACARD MATERIAL COMBINATION IN PARAGRAPH 8; 9; 10 ITEM TABLES;
D) REFER TO SUBPARAGRAPH "3.4 MATERIAL COMBINATION TABLE" AND IDENTIFY PLACARD MATERIAL, COMBINATION AND PRINTING METHOD;
E) OBEY ALL INSTRUCTION, NOTES, CAUTIONS AND WARNINGS SPECIFIED IN MATERIALS TECHNICAL DATA SHEET AND EQUIPMENT OPERATION MANUALS AND PRINT PLACARD;
F) CUT PLACARD TO SIZE SPECIFIED IN PARAGRAPH 8; 9; 10 ITEM TABLES;
H) IF APPLICABLE APPLY ADHESIVE TO PLACARD MATERIAL;
I) INSPECT, READ AND RECORD THE DIMENSIONS FOR THE ATTRIBUTE(S) MEASURED USING THE SAME NUMBER OF SIGNIFICANT DIGITS SPECIFIED BY THE DRAWING, STANDARD, OR SPECIFICATION AS A MINIMUM OR MAXIMUM LIMITING VALUE.

3.2 THE INTRODUCED PLACARD MATERIAL AND GRAPHIC APPLICATION METHOD ARE NOT CUSTOMIZABLE. ONLY MATERIALS AND GRAPHIC APPLICATION METHOD INTRODUCED IN SUBPARAGRAPH "3.4 MATERIAL COMBINATION TABLE" MUST BE USED TO MANUFACTURE PLACARDS
3.3 THE INTRODUCED MATERIAL COMBINATIONS **"E"** AND **"F"** ARE NOT INTERCHANGEABLE AND NOT INTERMIXABLE. TO IDENTIFY MATERIAL COMBINATION USED TO MANUFACTURE EACH ITEM (PLACARD) REFER TO PARAGRAPHS 8; 9; 10 ITEM TABLES.
3.4 MATERIAL COMBINATION TABLE:

MATERIAL COMBINATION	BASE MATERIAL	INK	ADHESIVE TYPE	BUILD-UP	MATERIAL DESIGNATION	REMARKS
E	MAKROFOL FR 7-2 0.025MM TH	HP LATEX	3M ADHESIVE 468MP		INTERIOR PLACARDS	LETTERING AND BACKGROUND: DIGITAL PRINTED
F	MAKROFOL FR 7-2 0.025MM TH	HP LATEX	N/A		INTERIOR PLACARDS	LETTERING AND BACKGROUND: DIGITAL PRINTED
3.5	MAKROFOL FR 7-2 0.025MM TH	UV INK	3M ADHESIVE 468MP		INTERIOR PLACARDS	LETTERING AND BACKGROUND: DIGITAL PRINTED
3.6	MAKROFOL FR 7-2 0.025MM TH	UV INK	N/A		INTERIOR PLACARDS	LETTERING AND BACKGROUND: DIGITAL PRINTED

3.5 ALTERNATIVE BUILD-UP FOR MATERIAL COMBINATION **E**.
3.6 ALTERNATIVE BUILD-UP FOR MATERIAL COMBINATION **F**.

4. PLACARD COLORS

FLAG NOTE	COLOR		CMYK CODE
4.1	FIRE RED		0, 100, 100, 0
4.2	GREEN		100, 0, 100, 0
4.3	LIGHT GREY		0, 2, 2, 2
4.4	LIGHT GREY 15%		1, 3, 2, 15
4.5	GREY 30%		0, 0, 0, 30
4.6	BROWN		47, 41, 40, 4
4.7	BLACK		0, 0, 0, 100
4.8	WHITE		0, 0, 0, 0
4.9	YELLOW		0, 0, 100, 0
4.10	ORANGE		0, 40, 100, 0
4.11	DEEP BLUE		100, 40, 0, 40
4.12	BLUE		90, 70, 0, 0
4.13	GREY 20%		0, 0, 0, 20
4.14	GREY 35%		0, 0, 0, 35
4.15	GREY 55%		0, 0, 0, 55
4.16	GREY 70%		0, 0, 0, 70

4.17 THE INTRODUCED PLACARD COLORS ARE NOT CUSTOMIZABLE.

5. LETTERING

5.1 LETTER FONT TYPE, STYLE, SIZE AND COLOR ARE NOT CUSTOMIZABLE.

5.2 THE FONT TYPE USED FOR LETTERING ON INTERIOR PLACARDS IS „HELVETICA NEUE CYR BOLD".

5.3 IF PLACARD FONT IS DIFFERENT FROM SPECIFIED ABOVE, THE FONT TYPE IS INDICATED IN PARAGRAPH 8; 9; 10; 11 TABLES.

6. PART NUMBER AND "EPA" MARKING

6.1 PART NUMBER BUILD UP:

JC 320 A 001 A 01

- 01 — ITEM NUMBER
- A — LANGUAGE
- 001 — GROUP NUMBER
- A — MATERIAL COMBINATION
- 320 — DRAWING NUMBER
- JC — J&C AEROSPACE DESIGN AND CERTIFICATION SERVICES EEU LTD

6.2 PLACARDS MUST BE EPA PART MARKED AS DEFINED IN EASA PART 21 IAW 21A.804(a) MARKING:

EPA JC320A001A1

- JC320A001A1 — ITEM PART NUMBER
- EPA — EUROPEAN PART APPROVAL

6.3 PART NUMBER FONT TYPE: ARIAL NORMAL;

6.4 PART NUMBER FONT SIZE: AT LEAST 1,5 mm;

6.5 PART NUMBER FONT COLOR: WHITE COLOR ON A DARK COLOR BACKGROUND, IN OTHER CASES P/N IS BLACK.

© J&C AERO EEU LTD. OWN THE COPYRIGHT OF THIS DRAWING AND IT SHALL NOT BE REPRODUCED BY ANY OTHER WITHOUT THE PRIOR WRITTEN PERMISSION

7. PLACARD INSTALLATION

7.1 DAMAGED OR DEGRADED PLACARDS TO BE REMOVED IAW AMM 11-00-00-000-003-A.

7.2 NEW ALTERNATIVE PLACARDS TO BE INSTALLED IAW AMM 11-00-00-400-021-A.

7.3 THIS INTERIOR PLACARD CATALOGUE DOES NOT INTRODUCE OR APPROVE INTERIOR PLACARD INSTALLATION IN SPECIFIED LOCATION, REFER TO SUB-PARAGRAPH 7.4.

7.4 ALL REPLACEMENT PLACARDS TO BE INSTALLED IN LOCATION FOR EACH AIRCRAFT ONLY IN ACCORDANCE WITH CUSTOMIZED RELEVANT AIRCRAFT DOCUMENTS:

- IPC;
- AMM;
- TC HOLDER DWG;
- CMM;
- SB;
- EASA PART 21J ORGANISATION APPROVED MODIFICATION;
- LATEST APPROVED EMERGENCY EQUIPMENT LAYOUT;
- LATEST APPROVED PASSENGER ACCOMMODATION LAYOUT (LOPA).

7.5 GENERAL INSTALLATION GUIDANCE, REF TO FIGURES 1.0 AND 2.0 BELOW:

A) ALL PLACARDS TO BE HORIZONTALLY AND VERTICALLY ALIGNED IF NOT SPECIFIED OTHERWISE;
B) NATURALLY REFERENCE EDGES, LINES OR POINTS HAVE TO BE OBSERVED;
C) DO NOT ATTACHE PLACARD AROUND A CORNER UNLESS OTHERWISE STATED;
D) AT NON-DIMENSIONED DISTANCES OF RADIUS- IT IS ACCEPTABLE TO START PLACARD APPLICATION FROM RADIUS TANGENT POINT;
E) PLACARD TO BE INSTALLED MIN 20 MM FROM EDGE OR CORNER IF NOT OTHERWISE SPECIFIED.

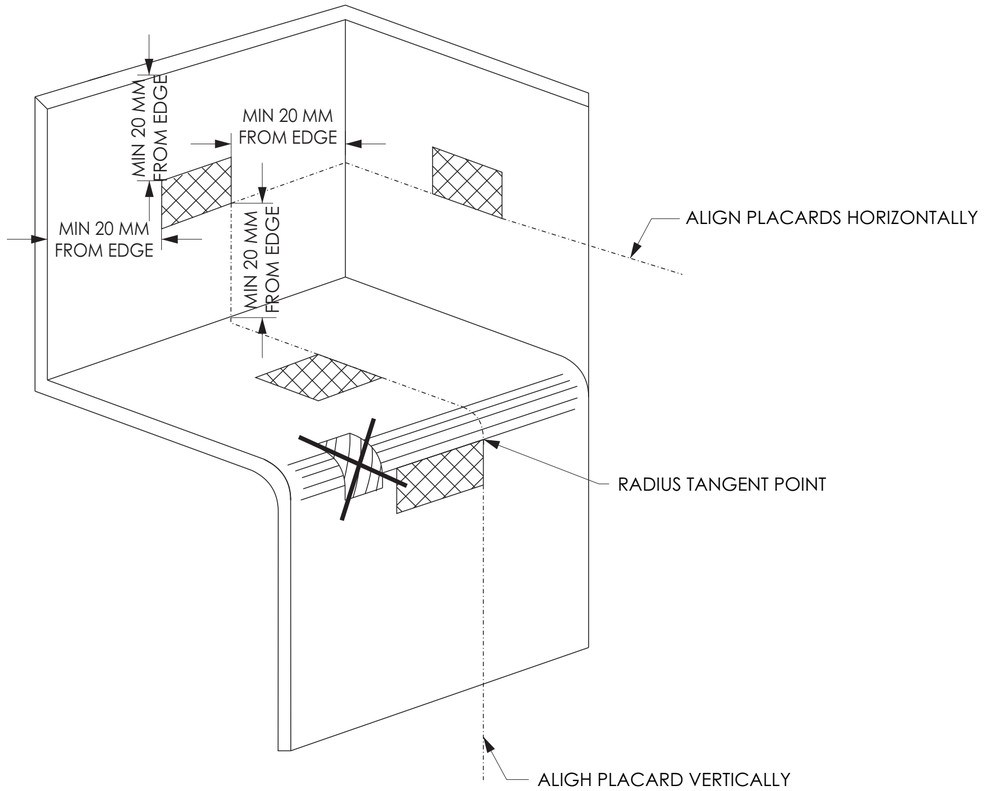

FIGURE 1.0
MARKINGS INSTALLATION GUIDELINES

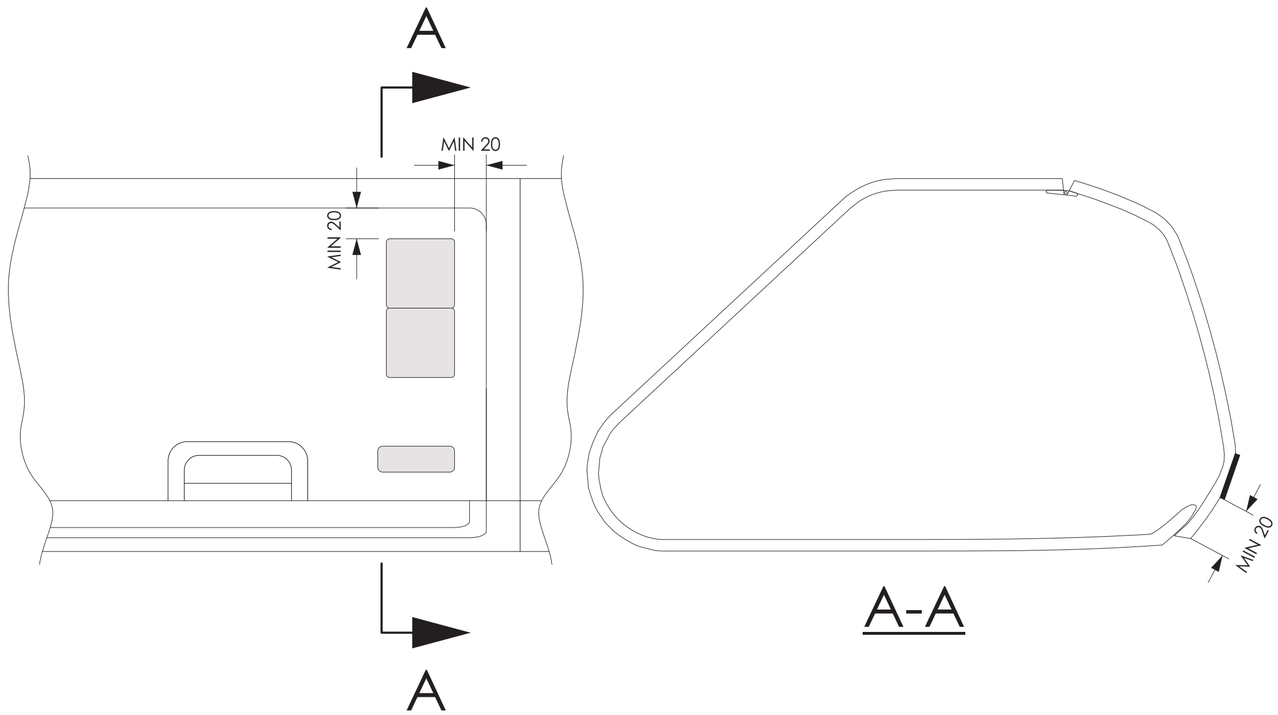

FIGURE 2.0
OVERHEAD STORAGE COMPARTMENT MARKINGS INSTALLATION GUIDELINES

© J&C AERO EEU LTD. OWN THE COPYRIGHT OF THIS DRAWING AND IT SHALL NOT BE REPRODUCED BY ANY OTHER WITHOUT THE PRIOR WRITTEN PERMISSION

8. TYPICAL INTERIOR PLACARD INSTALLATION LAYOUT AND LIST OF ITEMS NUMERIC INDEX

TABLE OF CONTENT: SHEET

8.1 SEAT NUMBERING	6-35
8.2 STOWAGE LOAD LIMIT	36-40
8.3 EXIT DOORS	41-47
8.4 OVERWING EMERGENCY EXIT MARKINGS	48-53
8.5 CURTAINS AND CLASS DIVIDERS	54-55
8.6 COCKPIT DOOR	56-57
8.7 SEAT MARKINGS	58-61
8.8 FLAP/SLAT VISUAL INSPECTION WINDOW MARKING	62-63

© J&C AERO EEU LTD. OWN THE COPYRIGHT OF THIS DRAWING AND IT SHALL NOT BE REPRODUCED BY ANY OTHER WITHOUT THE PRIOR WRITTEN PERMISSION

8.1. SEAT NUMBERING

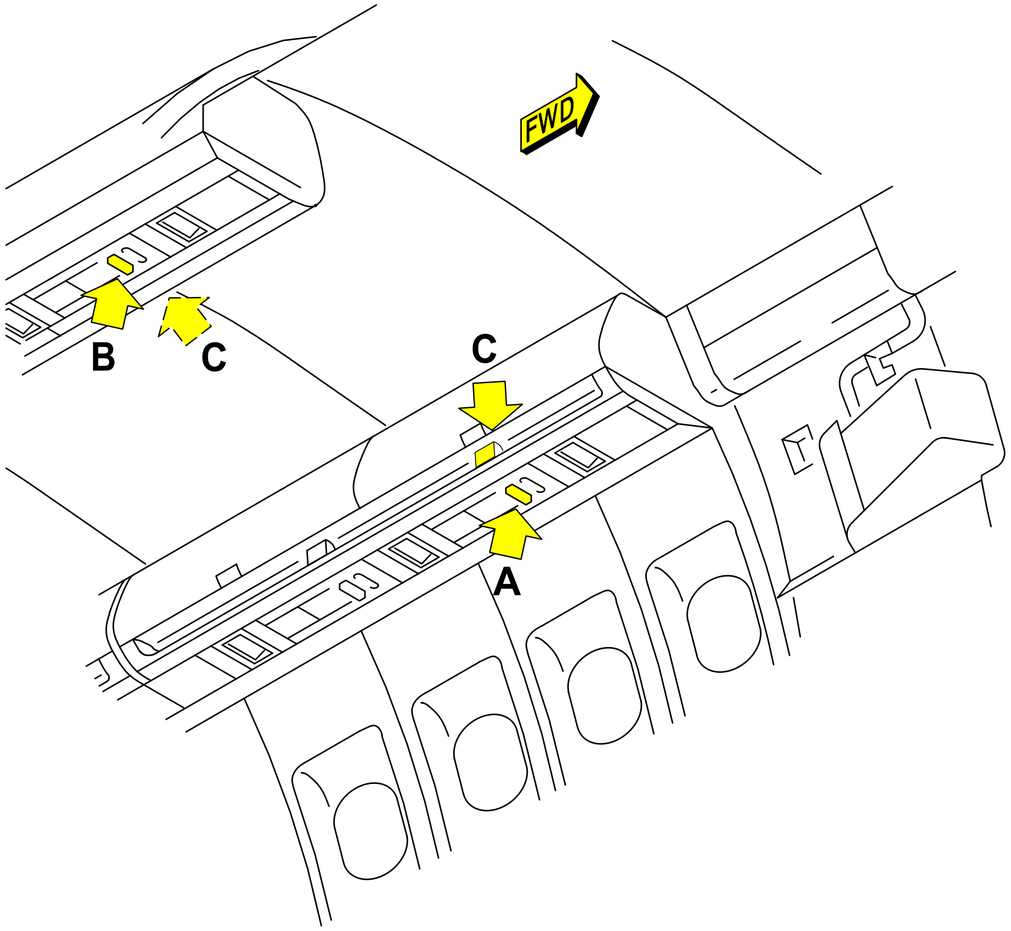

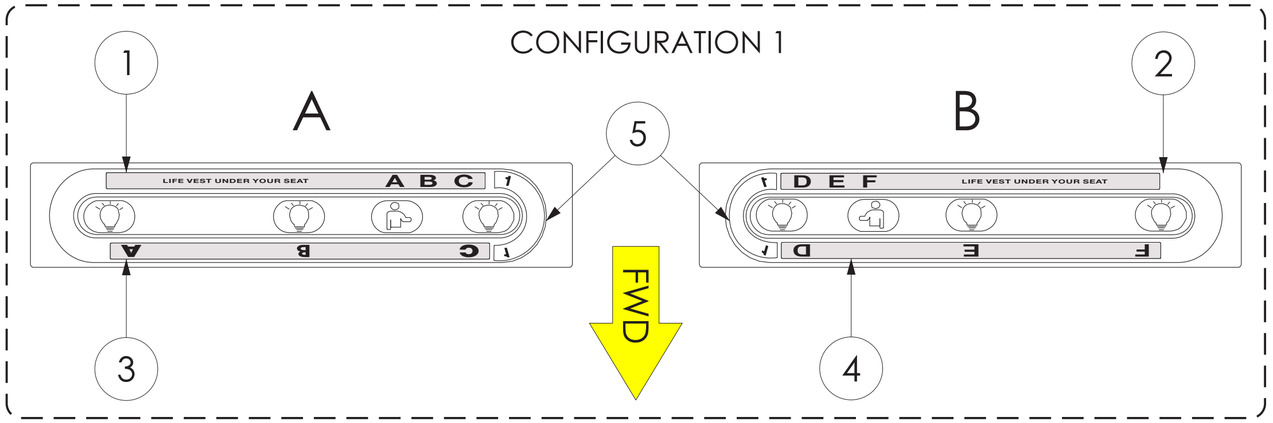

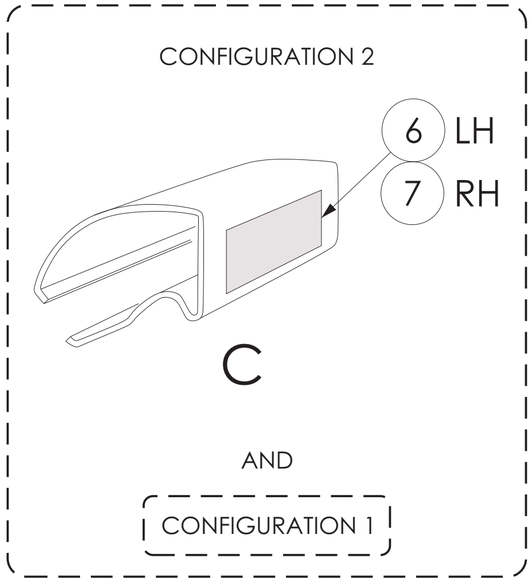

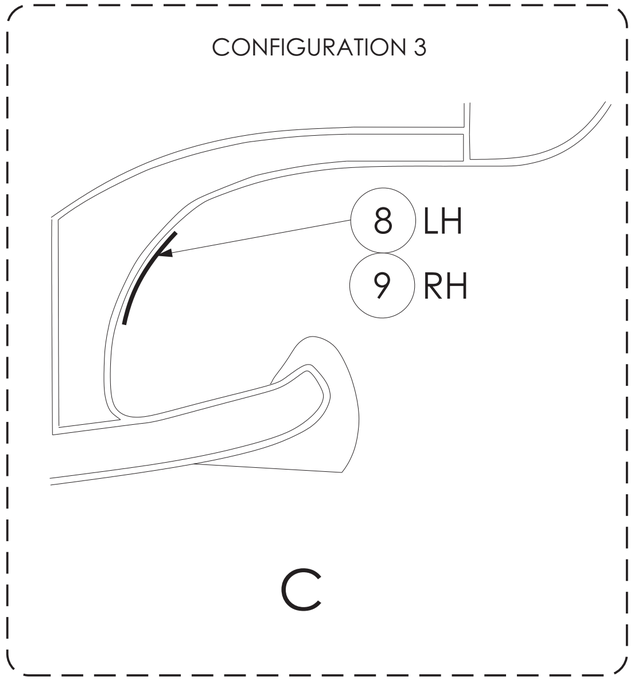

DWG SH NOTE: A - Refer to current AC configuration and latest approved passenger Accommodation Layout (LOPA) and AIPC for seat numbering.

B - There are three different seat numbering configurations for affected A320 aircrafts. The applicable configuration for specific aircraft to be identified IAW AIPC or physical inspection. Seat numbering configurations:

1) Configuration 1;
2) Configuration 1 + Configuration 2;
3) Configuration 3.

© J&C AERO EEU LTD. OWN THE COPYRIGHT OF THIS DRAWING AND IT SHALL NOT BE REPRODUCED BY ANY OTHER WITHOUT THE PRIOR WRITTEN PERMISSION

(CONT.) 8.1 SEAT NUMBERING

ITEM NR.	OEM PART NUMBER (FOR REFERENCE ONLY)	ALTERNATIVE EPA PART NUMBER	DESCRIPTION	LAYOUT	SIZE (WXH); LETTERS HEIGHT	COLOR INDEX	MATERIAL COMBINATION	IPC/DWG REFERENCE	NOTE
1	D2527719960400 D2527704870600	JC320E001A01	SEAT NUMBERING	Life vest under your seat A B C (EPA.JC320E001A01)	178X12 4,5; 9	4.3 4.7	E	11-42-25	
	D2528835665600	JC320E001A11	SEAT NUMBERING	Life vest under your seat A B (EPA.JC320E001A11)	178X12 4,5; 9	4.3 4.7	E	11-42-25	
	D2527714760800 D2527701160600	JC320E001A02	SEAT NUMBERING	Life vest under your seat A C (EPA.JC320E001A02)	178X12 4,5; 9	4.3 4.7	E	11-42-25	
	D2527706960600	JC320E001A03	SEAT NUMBERING	Life vest under center armrest A C (EPA.JC320E001A03)	178X12 4,5; 9	4.3 4.7	E	11-42-25	
	D2527703960600	JC320E001A13	SEAT NUMBERING	Life vest under your seat B C (EPA.JC320E001A13)	178X12 4,5; 9	4.3 4.7	E	11-42-25	
	D2527719960200	JC320E001A23	SEAT NUMBERING	A B Life vest under your seat (EPA.JC320E001A23)	178X12 4,5; 9	4.3 4.7	E	11-42-25	
2	D2527719965400 D2527701165500	JC320E001A04	SEAT NUMBERING	D E F Life vest under your seat (EPA.JC320E001A04)	178X12 4,5; 9	4.3 4.7	E	11-42-25 11-32-25	
	D2527714765800 F2527707567600	JC320E001A05	SEAT NUMBERING	D F Life vest under your seat (EPA.JC320E001A05)	178X12 4,5; 9	4.3 4.7	E	11-42-25	
	D2527706965600	JC320E001A06	SEAT NUMBERING	D F Life vest under center armrest (EPA.JC320E001A06)	178X12 4,5; 9	4.3 4.7	E	11-42-25	
	F2527705269000	JC320E001A15	SEAT NUMBERING	D E Life vest under your seat (EPA.JC320E001A15)	178X12 4,5; 9	4.3 4.7	E	11-42-25	
	D2527703370400	JC320E001A17	SEAT NUMBERING	E F Life vest under your seat (EPA.JC320E001A17)	178X12 4,5; 9	4.3 4.7	E	11-42-25	
	F2527705067000 D2527707375300	JC320E001A21	SEAT NUMBERING	C D Life vest under your seat (EPA.JC320E001A21)	178X12 4,5; 9	4.3 4.7	E	11-32-25	
3	D2527700870000	JC320E001A07	SEAT NUMBERING	C B A (EPA.JC320E001A07)	178X12 9	4.3 4.7	E	11-42-25 11-32-25	
	D2527701170400	JC320E001A08	SEAT NUMBERING	C A (EPA.JC320E001A08)	178X12 9	4.3 4.7	E	11-42-25	
	D2528835670300	JC320E001A12	SEAT NUMBERING	B A (EPA.JC320E001A12)	178X12 9	4.3 4.7	E	11-42-25	
	D2527703960700	JC320E001A14	SEAT NUMBERING	C B (EPA.JC320E001A14)	178X12 9	4.3 4.7	E	11-42-25	
	D2527700870200	JC320E001A20	SEAT NUMBERING	B A (EPA.JC320E001A20)	178X12 9	4.3 4.7	E	11-42-25	

© J&C AERO EEU LTD. OWN THE COPYRIGHT OF THIS DRAWING AND IT SHALL NOT BE REPRODUCED BY ANY OTHER WITHOUT THE PRIOR WRITTEN PERMISSION

(CONT.) 8.1 SEAT NUMBERING

ITEM NR.	OEM PART NUMBER (FOR REFERENCE ONLY)	ALTERNATIVE EPA PART NUMBER	DESCRIPTION	LAYOUT	SIZE (WXH); LETTERS HEIGHT	COLOR INDEX	MATERIAL COMBINATION	IPC/DWG REFERENCE	NOTE
4	D2527700875000	JC320E001A09	SEAT NUMBERING	F E D EPA.JC320E001A09	178X12 9	4.3 4.7	E	11-42-25	
	N/A	JC320E001A10	SEAT NUMBERING	F D EPA.JC320E001A10	178X12 9	4.3 4.7	E	11-42-25	
	D2527703969100	JC320E001A16	SEAT NUMBERING	EPA.JC320E001A16 E D	178X12 9	4.3 4.7	E	11-42-25	
	D2527703388200	JC320E001A18	SEAT NUMBERING	F E EPA.JC320E001A18	178X12 9	4.3 4.7	E	11-42-25	
	F2527705086000	JC320E001A22	SEAT NUMBERING	D C EPA.JC320E001A22	178X12 9	4.3 4.7	E	11-32-25	

© J&C AERO EEU LTD. OWN THE COPYRIGHT OF THIS DRAWING AND IT SHALL NOT BE REPRODUCED BY ANY OTHER WITHOUT THE PRIOR WRITTEN PERMISSION

(CONT.) 8.1 SEAT NUMBERING

ITEM NR.	OEM PART NUMBER (FOR REFERENCE ONLY)	ALTERNATIVE EPA PART NUMBER	DESCRIPTION	LAYOUT	SIZE (WXH); LETTERS HEIGHT	COLOR INDEX	MATERIAL COMBINATION	IPC/DWG REFERENCE	NOTE
5	D2527715065100 D2527715020100	JC320F002A01	SEAT NUMBERING		52X22 10	4.3 4.7	F	11-42-25 11-32-25	
	D2527715065200 D2527715020200	JC320F002A02	SEAT NUMBERING		52X22 10	4.3 4.7	F	11-42-25 11-32-25	
	D2527715065300 D2527715020300	JC320F002A03	SEAT NUMBERING		52X22 10	4.3 4.7	F	11-42-25 11-32-25	
	D2527715065400 D2527715020400	JC320F002A04	SEAT NUMBERING		52X22 10	4.3 4.7	F	11-42-25 11-32-25	
	D2527715065500 D2527715020500	JC320F002A05	SEAT NUMBERING		52X22 10	4.3 4.7	F	11-42-25 11-32-25	
	D2527715065600 D2527715020600	JC320F002A06	SEAT NUMBERING		52X22 10	4.3 4.7	F	11-42-25 11-32-25	
	D2527715065700 D2527715020700	JC320F002A07	SEAT NUMBERING		52X22 10	4.3 4.7	F	11-42-25 11-32-25	
	D2527715065800 D2527715020800	JC320F002A08	SEAT NUMBERING		52X22 10	4.3 4.7	F	11-42-25 11-32-25	
	D2527715065900 D2527715020900	JC320F002A09	SEAT NUMBERING		52X22 10	4.3 4.7	F	11-42-25 11-32-25	
	D2527715066000 D2527715021000	JC320F002A10	SEAT NUMBERING		52X22 10	4.3 4.7	F	11-42-25 11-32-25	

© J&C AERO EEU LTD. OWN THE COPYRIGHT OF THIS DRAWING AND IT SHALL NOT BE REPRODUCED BY ANY OTHER WITHOUT THE PRIOR WRITTEN PERMISSION

(CONT.) 8.1 SEAT NUMBERING

ITEM NR.	OEM PART NUMBER (FOR REFERENCE ONLY)	ALTERNATIVE EPA PART NUMBER	DESCRIPTION	LAYOUT	SIZE (WXH); LETTERS HEIGHT	COLOR INDEX	MATERIAL COMBINATION	IPC/DWG REFERENCE	NOTE
5	D2527715066100 D2527715021100	JC320F002A11	SEAT NUMBERING		52X22 10	4.3 4.7	F	11-42-25 11-32-25	
	D2527715066200 D2527715021200	JC320F002A12	SEAT NUMBERING		52X22 10	4.3 4.7	F	11-42-25 11-32-25	
	D2527715066300 D2527715021300	JC320F002A13	SEAT NUMBERING		52X22 10	4.3 4.7	F	11-42-25 11-32-25	
	D2527715066400 D2527715021400	JC320F002A14	SEAT NUMBERING		52X22 10	4.3 4.7	F	11-42-25 11-32-25	
	D2527715066500 D2527715021500	JC320F002A15	SEAT NUMBERING		52X22 10	4.3 4.7	F	11-42-25 11-32-25	
	D2527715066600 D2527715021600	JC320F002A16	SEAT NUMBERING		52X22 10	4.3 4.7	F	11-42-25 11-32-25	
	D2527715066700 D2527715021700	JC320F002A17	SEAT NUMBERING		52X22 10	4.3 4.7	F	11-42-25 11-32-25	
	D2527715066800 D2527715021800	JC320F002A18	SEAT NUMBERING		52X22 10	4.3 4.7	F	11-42-25 11-32-25	
	D2527715066900 D2527715021900	JC320F002A19	SEAT NUMBERING		52X22 10	4.3 4.7	F	11-42-25 11-32-25	
	D2527715067000 D2527715022000	JC320F002A20	SEAT NUMBERING		52X22 10	4.3 4.7	F	11-42-25 11-32-25	
	D2527715067100 D2527715022100	JC320F002A21	SEAT NUMBERING		52X22 10	4.3 4.7	F	11-42-25 11-32-25	

© J&C AERO EEU LTD. OWN THE COPYRIGHT OF THIS DRAWING AND IT SHALL NOT BE REPRODUCED BY ANY OTHER WITHOUT THE PRIOR WRITTEN PERMISSION

(CONT.) 8.1 SEAT NUMBERING

ITEM NR.	OEM PART NUMBER (FOR REFERENCE ONLY)	ALTERNATIVE EPA PART NUMBER	DESCRIPTION	LAYOUT	SIZE (WXH); LETTERS HEIGHT	COLOR INDEX	MATERIAL COMBINATION	IPC/DWG REFERENCE	NOTE
5	D2527715067200 D2527715022200	JC320F002A22	SEAT NUMBERING		52X22 10	4.3 4.7	F	11-42-25 11-32-25	
	D2527715067300 D2527715022300	JC320F002A23	SEAT NUMBERING		52X22 10	4.3 4.7	F	11-42-25 11-32-25	
	D2527715067400 D2527715022400	JC320F002A24	SEAT NUMBERING		52X22 10	4.3 4.7	F	11-42-25 11-32-25	
	D2527715067500 D2527715022500	JC320F002A25	SEAT NUMBERING		52X22 10	4.3 4.7	F	11-42-25 11-32-25	
	D2527715067600 D2527715022600	JC320F002A26	SEAT NUMBERING		52X22 10	4.3 4.7	F	11-42-25 11-32-25	
	D2527715067700 D2527715022700	JC320F002A27	SEAT NUMBERING		52X22 10	4.3 4.7	F	11-42-25 11-32-25	
	D2527715067800 D2527715022800	JC320F002A28	SEAT NUMBERING		52X22 10	4.3 4.7	F	11-42-25 11-32-25	
	D2527715067900 D2527715022900	JC320F002A29	SEAT NUMBERING		52X22 10	4.3 4.7	F	11-42-25 11-32-25	
	D2527715068000 D2527715023000	JC320F002A30	SEAT NUMBERING		52X22 10	4.3 4.7	F	11-42-25 11-32-25	
	D2527715068100 D2527715023100	JC320F002A31	SEAT NUMBERING		52X22 10	4.3 4.7	F	11-42-25 11-32-25	
	D2527715068200 D2527715023200	JC320F002A32	SEAT NUMBERING		52X22 10	4.3 4.7	F	11-42-25 11-32-25	

© J&C AERO EEU LTD. OWN THE COPYRIGHT OF THIS DRAWING AND IT SHALL NOT BE REPRODUCED BY ANY OTHER WITHOUT THE PRIOR WRITTEN PERMISSION

(CONT.) 8.1 SEAT NUMBERING

ITEM NR.	OEM PART NUMBER (FOR REFERENCE ONLY)	ALTERNATIVE EPA PART NUMBER	DESCRIPTION	LAYOUT	SIZE (WXH); LETTERS HEIGHT	COLOR INDEX	MATERIAL COMBINATION	IPC/DWG REFERENCE	NOTE
5	D2527715068300 D2527715023300	JC320F002A33	SEAT NUMBERING		52X22 10	4.3 4.7	F	11-42-25 11-32-25	
	D2527715068400 D2527715023400	JC320F002A34	SEAT NUMBERING		52X22 10	4.3 4.7	F	11-42-25 11-32-25	
	D2527715068500 D2527715023500	JC320F002A35	SEAT NUMBERING		52X22 10	4.3 4.7	F	11-42-25 11-32-25	
	D2527715068600 D2527715023600	JC320F002A36	SEAT NUMBERING		52X22 10	4.3 4.7	F	11-42-25 11-32-25	
	D2527715068700 D2527715023700	JC320F002A37	SEAT NUMBERING		52X22 10	4.3 4.7	F	11-42-25 11-32-25	
	D2527715068800 D2527715023800	JC320F002A38	SEAT NUMBERING		52X22 10	4.3 4.7	F	11-42-25 11-32-25	
	D2527715068900 D2527715023900	JC320F002A39	SEAT NUMBERING		52X22 10	4.3 4.7	F	11-42-25 11-32-25	
	D2527715069000 D2527715024000	JC320F002A40	SEAT NUMBERING		52X22 10	4.3 4.7	F	11-42-25 11-32-25	

© J&C AERO EEU LTD. OWN THE COPYRIGHT OF THIS DRAWING AND IT SHALL NOT BE REPRODUCED BY ANY OTHER WITHOUT THE PRIOR WRITTEN PERMISSION

(CONT.) 8.1 SEAT NUMBERING

ITEM NR.	OEM PART NUMBER (FOR REFERENCE ONLY)	ALTERNATIVE EPA PART NUMBER	DESCRIPTION	LAYOUT	SIZE (WXH); LETTERS HEIGHT	COLOR INDEX	MATERIAL COMBINATION	IPC/DWG REFERENCE	NOTE
6	D2527707760100	JC320E004A01	SEAT NUMBERING	1 EPA JC320E004A01 A window B center C aisle	70X26 3; 5; 18	4.3 4.7	E	11-52-25	
	D2527707760200	JC320E004A02	SEAT NUMBERING	2 EPA JC320E004A02 A window B center C aisle	70X26 3; 5; 18	4.3 4.7	E	11-52-25	
	D2527707760300	JC320E004A03	SEAT NUMBERING	3 EPA JC320E004A03 A window B center C aisle	70X26 3; 5; 18	4.3 4.7	E	11-52-25	
	D2527707760400	JC320E004A04	SEAT NUMBERING	4 EPA JC320E004A04 A window B center C aisle	70X26 3; 5; 18	4.3 4.7	E	11-52-25	
	D2527707760500	JC320E004A05	SEAT NUMBERING	5 EPA JC320E004A05 A window B center C aisle	70X26 3; 5; 18	4.3 4.7	E	11-52-25	
	D2527707760600	JC320E004A06	SEAT NUMBERING	6 EPA JC320E004A06 A window B center C aisle	70X26 3; 5; 18	4.3 4.7	E	11-52-25	
	D2527707760700	JC320E004A07	SEAT NUMBERING	7 EPA JC320E004A07 A window B center C aisle	70X26 3; 5; 18	4.3 4.7	E	11-52-25	
	D2527707760800	JC320E004A08	SEAT NUMBERING	8 EPA JC320E004A08 A window B center C aisle	70X26 3; 5; 18	4.3 4.7	E	11-52-25	
	D2527707760900	JC320E004A09	SEAT NUMBERING	9 EPA JC320E004A09 A window B center C aisle	70X26 3; 5; 18	4.3 4.7	E	11-52-25	

© J&C AERO EEU LTD. OWN THE COPYRIGHT OF THIS DRAWING AND IT SHALL NOT BE REPRODUCED BY ANY OTHER WITHOUT THE PRIOR WRITTEN PERMISSION

(CONT.) 8.1 SEAT NUMBERING

ITEM NR.	OEM PART NUMBER (FOR REFERENCE ONLY)	ALTERNATIVE EPA PART NUMBER	DESCRIPTION	LAYOUT	SIZE (WXH); LETTERS HEIGHT	COLOR INDEX	MATERIAL COMBINATION	IPC/DWG REFERENCE	NOTE
6	D2527707761000	JC320E004A10	SEAT NUMBERING	10 A window B center C aisle EPA JC320E004A10	70X26 3; 5; 18	4.3 4.7	E	11-52-25	
	D2527707761100	JC320E004A11	SEAT NUMBERING	11 A window B center C aisle EPA JC320E004A11	70X26 3; 5; 18	4.3 4.7	E	11-52-25	
	D2527707761200	JC320E004A12	SEAT NUMBERING	12 A window B center C aisle EPA JC320E004A12	70X26 3; 5; 18	4.3 4.7	E	11-52-25	
	D2528634861300	JC320E004A13	SEAT NUMBERING	13 A window B center C aisle EPA JC320E004A13	70X26 3; 5; 18	4.3 4.7	E	11-52-25	
	D2527707761400	JC320E004A14	SEAT NUMBERING	14 A window B center C aisle EPA JC320E004A14	70X26 3; 5; 18	4.3 4.7	E	11-52-25	
	D2527707761500	JC320E004A15	SEAT NUMBERING	15 A window B center C aisle EPA JC320E004A15	70X26 3; 5; 18	4.3 4.7	E	11-52-25	
	D2527707761600	JC320E004A16	SEAT NUMBERING	16 A window B center C aisle EPA JC320E004A16	70X26 3; 5; 18	4.3 4.7	E	11-52-25	
	D2527707761700	JC320E004A17	SEAT NUMBERING	17 A window B center C aisle EPA JC320E004A17	70X26 3; 5; 18	4.3 4.7	E	11-52-25	
	D2527707761800	JC320E004A18	SEAT NUMBERING	18 A window B center C aisle EPA JC320E004A18	70X26 3; 5; 18	4.3 4.7	E	11-52-25	

© J&C AERO EEU LTD. OWN THE COPYRIGHT OF THIS DRAWING AND IT SHALL NOT BE REPRODUCED BY ANY OTHER WITHOUT THE PRIOR WRITTEN PERMISSION

(CONT.) 8.1 SEAT NUMBERING

ITEM NR.	OEM PART NUMBER (FOR REFERENCE ONLY)	ALTERNATIVE EPA PART NUMBER	DESCRIPTION	LAYOUT	SIZE (WXH); LETTERS HEIGHT	COLOR INDEX	MATERIAL COMBINATION	IPC/DWG REFERENCE	NOTE
6	D2527707761900	JC320E004A19	SEAT NUMBERING	19 A window B center C aisle EPA JC320E004A19	70X26 3; 5; 18	4.3 4.7	E	11-52-25	
	D2527707762000	JC320E004A20	SEAT NUMBERING	20 A window B center C aisle EPA JC320E004A20	70X26 3; 5; 18	4.3 4.7	E	11-52-25	
	D2527707762100	JC320E004A21	SEAT NUMBERING	21 A window B center C aisle EPA JC320E004A21	70X26 3; 5; 18	4.3 4.7	E	11-52-25	
	D2527707762200	JC320E004A22	SEAT NUMBERING	22 A window B center C aisle EPA JC320E004A22	70X26 3; 5; 18	4.3 4.7	E	11-52-25	
	D2527707762300	JC320E004A23	SEAT NUMBERING	23 A window B center C aisle EPA JC320E004A23	70X26 3; 5; 18	4.3 4.7	E	11-52-25	
	D2527707762400	JC320E004A24	SEAT NUMBERING	24 A window B center C aisle EPA JC320E004A24	70X26 3; 5; 18	4.3 4.7	E	11-52-25	
	D2527707762500	JC320E004A25	SEAT NUMBERING	25 A window B center C aisle EPA JC320E004A25	70X26 3; 5; 18	4.3 4.7	E	11-52-25	
	D2527707762600	JC320E004A26	SEAT NUMBERING	26 A window B center C aisle EPA JC320E004A26	70X26 3; 5; 18	4.3 4.7	E	11-52-25	
	D2527707762700	JC320E004A27	SEAT NUMBERING	27 A window B center C aisle EPA JC320E004A27	70X26 3; 5; 18	4.3 4.7	E	11-52-25	

© J&C AERO EEU LTD. OWN THE COPYRIGHT OF THIS DRAWING AND IT SHALL NOT BE REPRODUCED BY ANY OTHER WITHOUT THE PRIOR WRITTEN PERMISSION

(CONT.) 8.1 SEAT NUMBERING

ITEM NR.	OEM PART NUMBER (FOR REFERENCE ONLY)	ALTERNATIVE EPA PART NUMBER	DESCRIPTION	LAYOUT	SIZE (WXH); LETTERS HEIGHT	COLOR INDEX	MATERIAL COMBINATION	IPC/DWG REFERENCE	NOTE
6	D2527707762700	JC320E004A28	SEAT NUMBERING	28 A window B center C aisle EPA JC320E004A28	70X26 3; 5; 18	4.3 4.7	E	11-52-25	
	N/A	JC320E004A29	SEAT NUMBERING	29 A window B center C aisle EPA JC320E004A29	70X26 3; 5; 18	4.3 4.7	E	N/A	
	N/A	JC320E004A30	SEAT NUMBERING	30 A window B center C aisle EPA JC320E004A30	70X26 3; 5; 18	4.3 4.7	E	N/A	
	N/A	JC320E004A31	SEAT NUMBERING	31 A window B center C aisle EPA JC320E004A31	70X26 3; 5; 18	4.3 4.7	E	N/A	
	N/A	JC320E004A32	SEAT NUMBERING	32 A window B center C aisle EPA JC320E004A32	70X26 3; 5; 18	4.3 4.7	E	N/A	
	N/A	JC320E004A33	SEAT NUMBERING	33 A window B center C aisle EPA JC320E004A33	70X26 3; 5; 18	4.3 4.7	E	N/A	
	N/A	JC320E004A34	SEAT NUMBERING	34 A window B center C aisle EPA JC320E004A34	70X26 3; 5; 18	4.3 4.7	E	N/A	
	N/A	JC320E004A35	SEAT NUMBERING	35 A window B center C aisle EPA JC320E004A35	70X26 3; 5; 18	4.3 4.7	E	N/A	
	D2528835263600	JC320E004A51	SEAT NUMBERING	36 A window B center C aisle EPA JC320E004A51	70X26 3; 5; 18	4.3 4.7	E	11-52-25	

© J&C AERO EEU LTD. OWN THE COPYRIGHT OF THIS DRAWING AND IT SHALL NOT BE REPRODUCED BY ANY OTHER WITHOUT THE PRIOR WRITTEN PERMISSION

(CONT.) 8.1 SEAT NUMBERING

ITEM NR.	OEM PART NUMBER (FOR REFERENCE ONLY)	ALTERNATIVE EPA PART NUMBER	DESCRIPTION	LAYOUT	SIZE (WXH); LETTERS HEIGHT	COLOR INDEX	MATERIAL COMBINATION	IPC/DWG REFERENCE	NOTE
6	D2528835263700	JC320E004A52	SEAT NUMBERING	37 A window B center C aisle EPA JC320E004A52	70X26 3; 5; 18	4.3 4.7	E	11-52-25	
	D2528601662400	JC320E004A53	SEAT NUMBERING	38 A window B center C aisle EPA JC320E004A53	70X26 3; 5; 18	4.3 4.7	E	11-52-25	
	N/A	JC320E004A55	SEAT NUMBERING	39 A window B center C aisle EPA JC320E004A55	70X26 3; 5; 18	4.3 4.7	E	N/A	
	N/A	JC320E004A56	SEAT NUMBERING	40 A window B center C aisle EPA JC320E004A56	70X26 3; 5; 18	4.3 4.7	E	N/A	
	D2528601662400	JC320E004A54	SEAT NUMBERING	24 B center C aisle EPA JC320E004A54	70X26 3; 5; 18	4.3 4.7	E	11-52-25	
	N/A	JC320E004A40	SEAT NUMBERING	1 A window B aisle EPA JC320E004A40	70X26 3; 5; 18	4.3 4.7	E	N/A	
	N/A	JC320E004A41	SEAT NUMBERING	2 A window B aisle EPA JC320E004A41	70X26 3; 5; 18	4.3 4.7	E	N/A	
	N/A	JC320E004A36	SEAT NUMBERING	1 A window C aisle EPA JC320E004A36	70X26 3; 5; 18	4.3 4.7	E	N/A	
	N/A	JC320E004A37	SEAT NUMBERING	2 A window C aisle EPA JC320E004A37	70X26 3; 5; 18	4.3 4.7	E	N/A	

© J&C AERO EEU LTD. OWN THE COPYRIGHT OF THIS DRAWING AND IT SHALL NOT BE REPRODUCED BY ANY OTHER WITHOUT THE PRIOR WRITTEN PERMISSION

(CONT.) 8.1 SEAT NUMBERING

ITEM NR.	OEM PART NUMBER (FOR REFERENCE ONLY)	ALTERNATIVE EPA PART NUMBER	DESCRIPTION	LAYOUT	SIZE (WXH); LETTERS HEIGHT	COLOR INDEX	MATERIAL COMBINATION	IPC/DWG REFERENCE	NOTE
6	N/A	JC320E004A38	SEAT NUMBERING	3 EPA JC320E004A38 A window C aisle	70X26 3; 5; 18	4.3 4.7	E	N/A	
	N/A	JC320E004A39	SEAT NUMBERING	4 EPA JC320E004A39 A window C aisle	70X26 3; 5; 18	4.3 4.7	E	N/A	

© J&C AERO EEU LTD. OWN THE COPYRIGHT OF THIS DRAWING AND IT SHALL NOT BE REPRODUCED BY ANY OTHER WITHOUT THE PRIOR WRITTEN PERMISSION

(CONT.) 8.1 SEAT NUMBERING

ITEM NR.	OEM PART NUMBER (FOR REFERENCE ONLY)	ALTERNATIVE EPA PART NUMBER	DESCRIPTION	LAYOUT	SIZE (WXH); LETTERS HEIGHT	COLOR INDEX	MATERIAL COMBINATION	IPC/DWG REFERENCE	NOTE
7	D2527707770100	JC320E005A01	SEAT NUMBERING	1 EPA JC320E005A01 F window E center D aisle	70X26 3; 5; 18	4.3 4.7	E	11-52-25	
	D2527707770200	JC320E005A02	SEAT NUMBERING	2 EPA JC320E005A02 F window E center D aisle	70X26 3; 5; 18	4.3 4.7	E	11-52-25	
	D2527707770300	JC320E005A03	SEAT NUMBERING	3 EPA JC320E005A03 F window E center D aisle	70X26 3; 5; 18	4.3 4.7	E	11-52-25	
	D2527707770400	JC320E005A04	SEAT NUMBERING	4 EPA JC320E005A04 F window E center D aisle	70X26 3; 5; 18	4.3 4.7	E	11-52-25	
	D2527707770500	JC320E005A05	SEAT NUMBERING	5 EPA JC320E005A05 F window E center D aisle	70X26 3; 5; 18	4.3 4.7	E	11-52-25	
	D2527707770600	JC320E005A06	SEAT NUMBERING	6 EPA JC320E005A06 F window E center D aisle	70X26 3; 5; 18	4.3 4.7	E	11-52-25	
	D2527707770700	JC320E005A07	SEAT NUMBERING	7 EPA JC320E005A07 F window E center D aisle	70X26 3; 5; 18	4.3 4.7	E	11-52-25	
	D2527707770800	JC320E005A08	SEAT NUMBERING	8 EPA JC320E005A08 F window E center D aisle	70X26 3; 5; 18	4.3 4.7	E	11-52-25	
	D2527707770900	JC320E005A09	SEAT NUMBERING	9 EPA JC320E005A09 F window E center D aisle	70X26 3; 5; 18	4.3 4.7	E	11-52-25	

© J&C AERO EEU LTD. OWN THE COPYRIGHT OF THIS DRAWING AND IT SHALL NOT BE REPRODUCED BY ANY OTHER WITHOUT THE PRIOR WRITTEN PERMISSION

(CONT.) 8.1 SEAT NUMBERING

ITEM NR.	OEM PART NUMBER (FOR REFERENCE ONLY)	ALTERNATIVE EPA PART NUMBER	DESCRIPTION	LAYOUT	SIZE (WXH); LETTERS HEIGHT	COLOR INDEX	MATERIAL COMBINATION	IPC/DWG REFERENCE	NOTE
7	D2527707771000	JC320E005A10	SEAT NUMBERING	10 F window E center D aisle EPA JC320E005A10	70X26 3; 5; 18	4.3 4.7	E	11-52-25	
	D2527707771100	JC320E005A11	SEAT NUMBERING	11 F window E center D aisle EPA JC320E005A11	70X26 3; 5; 18	4.3 4.7	E	11-52-25	
	D2527707771200	JC320E005A12	SEAT NUMBERING	12 F window E center D aisle EPA JC320E005A12	70X26 3; 5; 18	4.3 4.7	E	11-52-25	
	D2528634871300	JC320E005A13	SEAT NUMBERING	13 F window E center D aisle EPA JC320E005A13	70X26 3; 5; 18	4.3 4.7	E	11-52-25	
	D2527707771400	JC320E005A14	SEAT NUMBERING	14 F window E center D aisle EPA JC320E005A14	70X26 3; 5; 18	4.3 4.7	E	11-52-25	
	D2527707771500	JC320E005A15	SEAT NUMBERING	15 F window E center D aisle EPA JC320E005A15	70X26 3; 5; 18	4.3 4.7	E	11-52-25	
	D2527707771600	JC320E005A16	SEAT NUMBERING	16 F window E center D aisle EPA JC320E005A16	70X26 3; 5; 18	4.3 4.7	E	11-52-25	
	D2528634871700	JC320E005A17	SEAT NUMBERING	17 F window E center D aisle EPA JC320E005A17	70X26 3; 5; 18	4.3 4.7	E	11-52-25	
	D2527707771800	JC320E005A18	SEAT NUMBERING	18 F window E center D aisle EPA JC320E005A18	70X26 3; 5; 18	4.3 4.7	E	11-52-25	

© J&C AERO EEU LTD. OWN THE COPYRIGHT OF THIS DRAWING AND IT SHALL NOT BE REPRODUCED BY ANY OTHER WITHOUT THE PRIOR WRITTEN PERMISSION

(CONT.) 8.1 SEAT NUMBERING

ITEM NR.	OEM PART NUMBER (FOR REFERENCE ONLY)	ALTERNATIVE EPA PART NUMBER	DESCRIPTION	LAYOUT	SIZE (WXH); LETTERS HEIGHT	COLOR INDEX	MATERIAL COMBINATION	IPC/DWG REFERENCE	NOTE
7	D2527707771900	JC320E005A19	SEAT NUMBERING	19 F E D window center aisle EPA JC320E005A19	70X26 3; 5; 18	4.3 4.7	E	11-52-25	
	D2527707772000	JC320E005A20	SEAT NUMBERING	20 F E D window center aisle EPA JC320E005A20	70X26 3; 5; 18	4.3 4.7	E	11-52-25	
	D2527707772100	JC320E005A21	SEAT NUMBERING	21 F E D window center aisle EPA JC320E005A21	70X26 3; 5; 18	4.3 4.7	E	11-52-25	
	D2527707772200	JC320E005A22	SEAT NUMBERING	22 F E D window center aisle EPA JC320E005A22	70X26 3; 5; 18	4.3 4.7	E	11-52-25	
	D2527707772300	JC320E005A23	SEAT NUMBERING	23 F E D window center aisle EPA JC320E005A23	70X26 3; 5; 18	4.3 4.7	E	11-52-25	
	D2527707772400	JC320E005A24	SEAT NUMBERING	24 F E D window center aisle EPA JC320E005A24	70X26 3; 5; 18	4.3 4.7	E	11-52-25	
	D2527707772500	JC320E005A25	SEAT NUMBERING	25 F E D window center aisle EPA JC320E005A25	70X26 3; 5; 18	4.3 4.7	E	11-52-25	
	D2527707772600	JC320E005A26	SEAT NUMBERING	26 F E D window center aisle EPA JC320E005A26	70X26 3; 5; 18	4.3 4.7	E	11-52-25	
	D2527707772700	JC320E005A27	SEAT NUMBERING	27 F E D window center aisle EPA JC320E005A27	70X26 3; 5; 18	4.3 4.7	E	11-52-25	

© J&C AERO EEU LTD. OWN THE COPYRIGHT OF THIS DRAWING AND IT SHALL NOT BE REPRODUCED BY ANY OTHER WITHOUT THE PRIOR WRITTEN PERMISSION

(CONT.) 8.1 SEAT NUMBERING

ITEM NR.	OEM PART NUMBER (FOR REFERENCE ONLY)	ALTERNATIVE EPA PART NUMBER	DESCRIPTION	LAYOUT	SIZE (WXH); LETTERS HEIGHT	COLOR INDEX	MATERIAL COMBINATION	IPC/DWG REFERENCE	NOTE
7	D2527707772800	JC320E005A28	SEAT NUMBERING	28 F E D window center aisle EPA JC320E005A28	70X26 3; 5; 18	4.3 4.7	E	11-52-25	
	N/A	JC320E005A29	SEAT NUMBERING	29 F E D window center aisle EPA JC320E005A29	70X26 3; 5; 18	4.3 4.7	E	N/A	
	N/A	JC320E005A30	SEAT NUMBERING	30 F E D window center aisle EPA JC320E005A30	70X26 3; 5; 18	4.3 4.7	E	N/A	
	N/A	JC320E005A31	SEAT NUMBERING	31 F E D window center aisle EPA JC320E005A31	70X26 3; 5; 18	4.3 4.7	E	N/A	
	N/A	JC320E005A32	SEAT NUMBERING	32 F E D window center aisle EPA JC320E005A32	70X26 3; 5; 18	4.3 4.7	E	N/A	
	N/A	JC320E005A33	SEAT NUMBERING	33 F E D window center aisle EPA JC320E005A33	70X26 3; 5; 18	4.3 4.7	E	N/A	
	N/A	JC320E005A34	SEAT NUMBERING	34 F E D window center aisle EPA JC320E005A34	70X26 3; 5; 18	4.3 4.7	E	N/A	
	N/A	JC320E005A35	SEAT NUMBERING	35 F E D window center aisle EPA JC320E005A35	70X26 3; 5; 18	4.3 4.7	E	N/A	
	D2528835273600	JC320E005A51	SEAT NUMBERING	36 F E D window center aisle EPA JC320E005A51	70X26 3; 5; 18	4.3 4.7	E	11-52-25	

© J&C AERO EEU LTD. OWN THE COPYRIGHT OF THIS DRAWING AND IT SHALL NOT BE REPRODUCED BY ANY OTHER WITHOUT THE PRIOR WRITTEN PERMISSION

(CONT.) 8.1 SEAT NUMBERING

ITEM NR.	OEM PART NUMBER (FOR REFERENCE ONLY)	ALTERNATIVE EPA PART NUMBER	DESCRIPTION	LAYOUT	SIZE (WXH); LETTERS HEIGHT	COLOR INDEX	MATERIAL COMBINATION	IPC/DWG REFERENCE	NOTE
7	D2528835273700	JC320E005A52	SEAT NUMBERING	37 F window E center D aisle EPA JC320E005A52	70X26 3; 5; 18	4.3 4.7	E	11-52-25	
	N/A	JC320E005A53	SEAT NUMBERING	38 F window E center D aisle EPA JC320E005A53	70X26 3; 5; 18	4.3 4.7	E	N/A	
	N/A	JC320E005A55	SEAT NUMBERING	39 F window E center D aisle EPA JC320E005A55	70X26 3; 5; 18	4.3 4.7	E	N/A	
	N/A	JC320E005A56	SEAT NUMBERING	40 F window E center D aisle EPA JC320E005A56	70X26 3; 5; 18	4.3 4.7	E	N/A	
	D2527806272400	JC320E005A54	SEAT NUMBERING	24 E center D aisle EPA JC320E005A54	70X26 3; 5; 18	4.3 4.7	E	11-52-25	
	N/A	JC320E005A40	SEAT NUMBERING	1 F window E aisle EPA JC320E005A40	70X26 3; 5; 18	4.3 4.7	E	N/A	
	N/A	JC320E005A41	SEAT NUMBERING	2 F window E aisle EPA JC320E005A41	70X26 3; 5; 18	4.3 4.7	E	N/A	
	N/A	JC320E005A36	SEAT NUMBERING	1 F window D aisle EPA JC320E005A36	70X26 3; 5; 18	4.3 4.7	E	N/A	
	N/A	JC320E005A37	SEAT NUMBERING	2 F window D aisle EPA JC320E005A37	70X26 3; 5; 18	4.3 4.7	E	N/A	

© J&C AERO EEU LTD. OWN THE COPYRIGHT OF THIS DRAWING AND IT SHALL NOT BE REPRODUCED BY ANY OTHER WITHOUT THE PRIOR WRITTEN PERMISSION

(CONT.) 8.1 SEAT NUMBERING

ITEM NR.	OEM PART NUMBER (FOR REFERENCE ONLY)	ALTERNATIVE EPA PART NUMBER	DESCRIPTION	LAYOUT	SIZE (WXH); LETTERS HEIGHT	COLOR INDEX	MATERIAL COMBINATION	IPC/DWG REFERENCE	NOTE
7	N/A	JC320E005A38	SEAT NUMBERING	3 F window D aisle EPA JC320E005A38	70X26 3; 5; 18	4.3 4.7	E	N/A	
	N/A	JC320E005A39	SEAT NUMBERING	4 F window D aisle EPA JC320E005A39	70X26 3; 5; 18	4.3 4.7	E	N/A	

© J&C AERO EEU LTD. OWN THE COPYRIGHT OF THIS DRAWING AND IT SHALL NOT BE REPRODUCED BY ANY OTHER WITHOUT THE PRIOR WRITTEN PERMISSION

(CONT.) 8.1 SEAT NUMBERING

ITEM NR.	OEM PART NUMBER (FOR REFERENCE ONLY)	ALTERNATIVE EPA PART NUMBER	DESCRIPTION	LAYOUT	SIZE (WXH); LETTERS HEIGHT	COLOR INDEX	MATERIAL COMBINATION	IPC/DWG REFERENCE	NOTE
8	D2527710120100	JC320E012A01	SEAT NUMBERING		95x20 6; 14	4.3 4.7	E	11-52-25	
	D2527710120200	JC320E012A02	SEAT NUMBERING		95x20 6; 14	4.3 4.7	E	11-52-25	
	D2527710120300	JC320E012A03	SEAT NUMBERING		95x20 6; 14	4.3 4.7	E	11-52-25	
	D2527710120400	JC320E012A04	SEAT NUMBERING		95x20 6; 14	4.3 4.7	E	11-52-25	
	D2527710120500	JC320E012A05	SEAT NUMBERING		95x20 6; 14	4.3 4.7	E	11-52-25	
	D2527710120600	JC320E012A06	SEAT NUMBERING		95x20 6; 14	4.3 4.7	E	11-52-25	

© J&C AERO EEU LTD. OWN THE COPYRIGHT OF THIS DRAWING AND IT SHALL NOT BE REPRODUCED BY ANY OTHER WITHOUT THE PRIOR WRITTEN PERMISSION

(CONT.) 8.1 SEAT NUMBERING

ITEM NR.	OEM PART NUMBER (FOR REFERENCE ONLY)	ALTERNATIVE EPA PART NUMBER	DESCRIPTION	LAYOUT	SIZE (WXH); LETTERS HEIGHT	COLOR INDEX	MATERIAL COMBINATION	IPC/DWG REFERENCE	NOTE
8	D2527710120700	JC320E012A07	SEAT NUMBERING		95x20 6; 14	4.3 4.7	E	11-52-25	
	D2528718740800	JC320E012A08	SEAT NUMBERING		95x20 6; 14	4.3 4.7	E	11-52-25	
	D2528718740900	JC320E012A09	SEAT NUMBERING		95x20 6; 14	4.3 4.7	E	11-52-25	
	D2528718741000	JC320E012A10	SEAT NUMBERING		95x20 6; 14	4.3 4.7	E	11-52-25	
	D2527710121100	JC320E012A11	SEAT NUMBERING		95x20 6; 14	4.3 4.7	E	11-52-25	
	D2528718741200	JC320E012A12	SEAT NUMBERING		95x20 6; 14	4.3 4.7	E	11-52-25	
	D2527710121300	JC320E012A13	SEAT NUMBERING		95x20 6; 14	4.3 4.7	E	11-52-25	
	D2528718741400	JC320E012A14	SEAT NUMBERING		95x20 6; 14	4.3 4.7	E	11-52-25	
	D2528718741500	JC320E012A15	SEAT NUMBERING		95x20 6; 14	4.3 4.7	E	11-52-25	

© J&C AERO EEU LTD. OWN THE COPYRIGHT OF THIS DRAWING AND IT SHALL NOT BE REPRODUCED BY ANY OTHER WITHOUT THE PRIOR WRITTEN PERMISSION

(CONT.) 8.1 SEAT NUMBERING

ITEM NR.	OEM PART NUMBER (FOR REFERENCE ONLY)	ALTERNATIVE EPA PART NUMBER	DESCRIPTION	LAYOUT	SIZE (WXH); LETTERS HEIGHT	COLOR INDEX	MATERIAL COMBINATION	IPC/DWG REFERENCE	NOTE
8	D2528718741600	JC320E012A16	SEAT NUMBERING		95x20 6; 14	4.3 4.7	E	11-52-25	
	D2528718741700	JC320E012A17	SEAT NUMBERING		95x20 6; 14	4.3 4.7	E	11-52-25	
	D2528718741800	JC320E012A18	SEAT NUMBERING		95x20 6; 14	4.3 4.7	E	11-52-25	
	D2528718741900	JC320E012A19	SEAT NUMBERING		95x20 6; 14	4.3 4.7	E	11-52-25	
	D2528718742000	JC320E012A20	SEAT NUMBERING		95x20 6; 14	4.3 4.7	E	11-52-25	
	D2528718742100	JC320E012A21	SEAT NUMBERING		95x20 6; 14	4.3 4.7	E	11-52-25	
	D2528718742200	JC320E012A22	SEAT NUMBERING		95x20 6; 14	4.3 4.7	E	11-52-25	
	D2528718742300	JC320E012A23	SEAT NUMBERING		95x20 6; 14	4.3 4.7	E	11-52-25	
	D2528718742400	JC320E012A24	SEAT NUMBERING		95x20 6; 14	4.3 4.7	E	11-52-25	

© J&C AERO EEU LTD. OWN THE COPYRIGHT OF THIS DRAWING AND IT SHALL NOT BE REPRODUCED BY ANY OTHER WITHOUT THE PRIOR WRITTEN PERMISSION

(CONT.) 8.1 SEAT NUMBERING

ITEM NR.	OEM PART NUMBER (FOR REFERENCE ONLY)	ALTERNATIVE EPA PART NUMBER	DESCRIPTION	LAYOUT	SIZE (WXH); LETTERS HEIGHT	COLOR INDEX	MATERIAL COMBINATION	IPC/DWG REFERENCE	NOTE
8	D2527710122500	JC320E012A25	SEAT NUMBERING		95x20 6; 14	4.3 4.7	E	11-52-25	
	D2528718742600	JC320E012A26	SEAT NUMBERING		95x20 6; 14	4.3 4.7	E	11-52-25	
	D2528718742700	JC320E012A27	SEAT NUMBERING		95x20 6; 14	4.3 4.7	E	11-52-25	
	D2528718742800	JC320E012A28	SEAT NUMBERING		95x20 6; 14	4.3 4.7	E	11-52-25	
	D2528718742900	JC320E012A29	SEAT NUMBERING		95x20 6; 14	4.3 4.7	E	11-52-25	
	D2528718743000	JC320E012A30	SEAT NUMBERING		95x20 6; 14	4.3 4.7	E	11-52-25	
	D2528718743100	JC320E012A31	SEAT NUMBERING		95x20 6; 14	4.3 4.7	E	11-52-25	
	D2528718743200	JC320E012A41	SEAT NUMBERING		95x20 6; 14	4.3 4.7	E	N/A	
	D2528718743300	JC320E012A42	SEAT NUMBERING		95x20 6; 14	4.3 4.7	E	N/A	

© J&C AERO EEU LTD. OWN THE COPYRIGHT OF THIS DRAWING AND IT SHALL NOT BE REPRODUCED BY ANY OTHER WITHOUT THE PRIOR WRITTEN PERMISSION

(CONT.) 8.1 SEAT NUMBERING

ITEM NR.	OEM PART NUMBER (FOR REFERENCE ONLY)	ALTERNATIVE EPA PART NUMBER	DESCRIPTION	LAYOUT	SIZE (WXH); LETTERS HEIGHT	COLOR INDEX	MATERIAL COMBINATION	IPC/DWG REFERENCE	NOTE
8	D2528718743400	JC320E012A43	SEAT NUMBERING		95x20 6; 14	4.3 4.7	E	N/A	
	D2528718743500	JC320E012A44	SEAT NUMBERING		95x20 6; 14	4.3 4.7	E	N/A	
	D2528718743600	JC320E012A45	SEAT NUMBERING		95x20 6; 14	4.3 4.7	E	N/A	
	N/A	JC320E012A46	SEAT NUMBERING		95x20 6; 14	4.3 4.7	E	N/A	
	N/A	JC320E012A47	SEAT NUMBERING		95x20 6; 14	4.3 4.7	E	N/A	
	D2527710189800	JC320E012A50	SEAT NUMBERING		95x20 6; 14	4.3 4.7	E	11-52-25	
9	D2527710125100	JC320E014A01	SEAT NUMBERING		95x20 6; 14	4.3 4.7	E	11-52-25	
	D2527710125200	JC320E014A02	SEAT NUMBERING		95x20 6; 14	4.3 4.7	E	11-52-25	

© J&C AERO EEU LTD. OWN THE COPYRIGHT OF THIS DRAWING AND IT SHALL NOT BE REPRODUCED BY ANY OTHER WITHOUT THE PRIOR WRITTEN PERMISSION

(CONT.) 8.1 SEAT NUMBERING

ITEM NR.	OEM PART NUMBER (FOR REFERENCE ONLY)	ALTERNATIVE EPA PART NUMBER	DESCRIPTION	LAYOUT	SIZE (WXH); LETTERS HEIGHT	COLOR INDEX	MATERIAL COMBINATION	IPC/DWG REFERENCE	NOTE
9	D2527710125300	JC320E014A03	SEAT NUMBERING		95x20 6; 14	4.3 4.7	E	11-52-25	
	D25277101253400	JC320E014A04	SEAT NUMBERING		95x20 6; 14	4.3 4.7	E	11-52-25	
	D2527710125500	JC320E014A05	SEAT NUMBERING		95x20 6; 14	4.3 4.7	E	11-52-25	
	D2527710125600	JC320E014A06	SEAT NUMBERING		95x20 6; 14	4.3 4.7	E	11-52-25	
	D2527710125700	JC320E014A07	SEAT NUMBERING		95x20 6; 14	4.3 4.7	E	11-52-25	
	D2528718745800	JC320E014A08	SEAT NUMBERING		95x20 6; 14	4.3 4.7	E	11-52-25	
	D2528718745900	JC320E014A09	SEAT NUMBERING		95x20 6; 14	4.3 4.7	E	11-52-25	
	D2528718746000	JC320E014A10	SEAT NUMBERING		95x20 6; 14	4.3 4.7	E	N/A	
	N/A	JC320E014A11	SEAT NUMBERING		95x20 6; 14	4.3 4.7	E	N/A	

© J&C AERO EEU LTD. OWN THE COPYRIGHT OF THIS DRAWING AND IT SHALL NOT BE REPRODUCED BY ANY OTHER WITHOUT THE PRIOR WRITTEN PERMISSION

(CONT.) 8.1 SEAT NUMBERING

ITEM NR.	OEM PART NUMBER (FOR REFERENCE ONLY)	ALTERNATIVE EPA PART NUMBER	DESCRIPTION	LAYOUT	SIZE (WXH); LETTERS HEIGHT	COLOR INDEX	MATERIAL COMBINATION	IPC/DWG REFERENCE	NOTE
9	D2528718746200	JC320E014A12	SEAT NUMBERING	12 0 FED EPA JC320E014A12	95x20 6; 14	4.3 4.7	E	11-52-25	
	D2527710126300	JC320E014A13	SEAT NUMBERING	13 0 FED EPA JC320E014A13	95x20 6; 14	4.3 4.7	E	11-52-25	
	D2528718746400	JC320E014A14	SEAT NUMBERING	14 0 FED EPA JC320E014A14	95x20 6; 14	4.3 4.7	E	11-52-25	
	D2528718746500	JC320E014A15	SEAT NUMBERING	15 0 FED EPA JC320E014A15	95x20 6; 14	4.3 4.7	E	11-52-25	
	D2528718746600	JC320E014A16	SEAT NUMBERING	16 0 FED EPA JC320E014A16	95x20 6; 14	4.3 4.7	E	11-52-25	
	D2528718746700	JC320E014A17	SEAT NUMBERING	17 0 FED EPA JC320E014A17	95x20 6; 14	4.3 4.7	E	11-52-25	
	D2528718746800	JC320E014A18	SEAT NUMBERING	18 0 FED EPA JC320E014A18	95x20 6; 14	4.3 4.7	E	11-52-25	
	D2528718746900	JC320E014A19	SEAT NUMBERING	19 0 FED EPA JC320E014A19	95x20 6; 14	4.3 4.7	E	11-52-25	
	D2528718747000	JC320E014A20	SEAT NUMBERING	20 0 FED EPA JC320E014A20	95x20 6; 14	4.3 4.7	E	11-52-25	

© J&C AERO EEU LTD. OWN THE COPYRIGHT OF THIS DRAWING AND IT SHALL NOT BE REPRODUCED BY ANY OTHER WITHOUT THE PRIOR WRITTEN PERMISSION

(CONT.) 8.1 SEAT NUMBERING

ITEM NR.	OEM PART NUMBER (FOR REFERENCE ONLY)	ALTERNATIVE EPA PART NUMBER	DESCRIPTION	LAYOUT	SIZE (WXH); LETTERS HEIGHT	COLOR INDEX	MATERIAL COMBINATION	IPC/DWG REFERENCE	NOTE
9	D2528718747100	JC320E014A21	SEAT NUMBERING	21 0 FED EPA JC320E014A21	95x20 6; 14	4.3 4.7	E	11-52-25	
	D2528718747200	JC320E014A22	SEAT NUMBERING	22 0 FED EPA JC320E014A22	95x20 6; 14	4.3 4.7	E	11-52-25	
	D2528718747300	JC320E014A23	SEAT NUMBERING	23 0 FED EPA JC320E014A23	95x20 6; 14	4.3 4.7	E	11-52-25	
	D2528718747400	JC320E014A24	SEAT NUMBERING	24 0 FED EPA JC320E014A24	95x20 6; 14	4.3 4.7	E	11-52-25	
	D2527710127500	JC320E014A25	SEAT NUMBERING	25 0 FED EPA JC320E014A25	95x20 6; 14	4.3 4.7	E	11-52-25	
	D2528718747600	JC320E014A26	SEAT NUMBERING	26 0 FED EPA JC320E014A26	95x20 6; 14	4.3 4.7	E	11-52-25	
	D2528718747700	JC320E014A27	SEAT NUMBERING	27 0 FED EPA JC320E014A27	95x20 6; 14	4.3 4.7	E	11-52-25	
	D2528718747800	JC320E014A28	SEAT NUMBERING	28 0 FED EPA JC320E014A28	95x20 6; 14	4.3 4.7	E	11-52-25	
	D2528718747900	JC320E014A29	SEAT NUMBERING	29 0 FED EPA JC320E014A29	95x20 6; 14	4.3 4.7	E	11-52-25	

© J&C AERO EEU LTD. OWN THE COPYRIGHT OF THIS DRAWING AND IT SHALL NOT BE REPRODUCED BY ANY OTHER WITHOUT THE PRIOR WRITTEN PERMISSION

(CONT.) 8.1 SEAT NUMBERING

ITEM NR.	OEM PART NUMBER (FOR REFERENCE ONLY)	ALTERNATIVE EPA PART NUMBER	DESCRIPTION	LAYOUT	SIZE (WXH); LETTERS HEIGHT	COLOR INDEX	MATERIAL COMBINATION	IPC/DWG REFERENCE	NOTE
9	D2528718748000	JC320E014A30	SEAT NUMBERING		95x20 6; 14	4.3 4.7	E	11-52-25	
	D2528718748100	JC320E014A31	SEAT NUMBERING		95x20 6; 14	4.3 4.7	E	11-52-25	
	D2528718748200	JC320E014A41	SEAT NUMBERING		95x20 6; 14	4.3 4.7	E	N/A	
	D2528718748300	JC320E014A42	SEAT NUMBERING		95x20 6; 14	4.3 4.7	E	N/A	
	D2528718748400	JC320E014A43	SEAT NUMBERING		95x20 6; 14	4.3 4.7	E	N/A	
	D2528718748500	JC320E014A44	SEAT NUMBERING		95x20 6; 14	4.3 4.7	E	N/A	
	N/A	JC320E014A45	SEAT NUMBERING		95x20 6; 14	4.3 4.7	E	N/A	
	N/A	JC320E014A46	SEAT NUMBERING		95x20 6; 14	4.3 4.7	E	N/A	
	N/A	JC320E014A47	SEAT NUMBERING		95x20 6; 14	4.3 4.7	E	N/A	

© J&C AERO EEU LTD. OWN THE COPYRIGHT OF THIS DRAWING AND IT SHALL NOT BE REPRODUCED BY ANY OTHER WITHOUT THE PRIOR WRITTEN PERMISSION

(CONT.) 8.1 SEAT NUMBERING

ITEM NR.	OEM PART NUMBER (FOR REFERENCE ONLY)	ALTERNATIVE EPA PART NUMBER	DESCRIPTION	LAYOUT	SIZE (WXH); LETTERS HEIGHT	COLOR INDEX	MATERIAL COMBINATION	IPC/DWG REFERENCE	NOTE
9	D2527710187700	JC320E014A50	SEAT NUMBERING		95x20 6; 14	4.3 4.7	E	11-52-25	
	D2528718751400	JC320E014A40	SEAT NUMBERING		95x20 6; 14	4.3 4.7	E	11-62-25	
	D2528718751300	JC320E014A38	SEAT NUMBERING		95x20 6; 14	4.3 4.7	E	11-62-25	
	D2528718755100	JC320E014A57	SEAT NUMBERING		95x20 6; 14	4.3 4.7	E	11-62-25	
	D2528718755200	JC320E014A58	SEAT NUMBERING		95x20 6; 14	4.3 4.7	E	11-62-25	
	N/A	JC320E014A59	SEAT NUMBERING		95x20 6; 14	4.3 4.7	E	11-62-25	
	N/A	JC320E014A60	SEAT NUMBERING		95x20 6; 14	4.3 4.7	E	11-62-25	
8	D2528718750100	JC320E012A57	SEAT NUMBERING		95x20 6; 14	4.3 4.7	E	11-62-25	
	D2528718750200	JC320E012A58	SEAT NUMBERING		95x20 6; 14	4.3 4.7	E	11-62-25	

© J&C AERO EEU LTD. OWN THE COPYRIGHT OF THIS DRAWING AND IT SHALL NOT BE REPRODUCED BY ANY OTHER WITHOUT THE PRIOR WRITTEN PERMISSION

(CONT.) 8.1 SEAT NUMBERING

ITEM NR.	OEM PART NUMBER (FOR REFERENCE ONLY)	ALTERNATIVE EPA PART NUMBER	DESCRIPTION	LAYOUT	SIZE (WXH); LETTERS HEIGHT	COLOR INDEX	MATERIAL COMBINATION	IPC/DWG REFERENCE	NOTE
8	N/A	JC320E012A59	SEAT NUMBERING		95x20 6; 14	4.3 4.7	E	11-62-25	
	N/A	JC320E012A60	SEAT NUMBERING		95x20 6; 14	4.3 4.7	E	11-62-25	
	D2528718751100	JC320E012A38	SEAT NUMBERING		95x20 6; 14	4.3 4.7	E	11-62-25	
	D2528718751200	JC320E014A40	SEAT NUMBERING	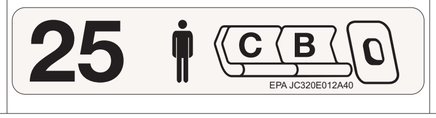	95x20 6; 14	4.3 4.7	E	11-62-25	

© J&C AERO EEU LTD. OWN THE COPYRIGHT OF THIS DRAWING AND IT SHALL NOT BE REPRODUCED BY ANY OTHER WITHOUT THE PRIOR WRITTEN PERMISSION

8.2. STOWAGE LOAD LIMIT

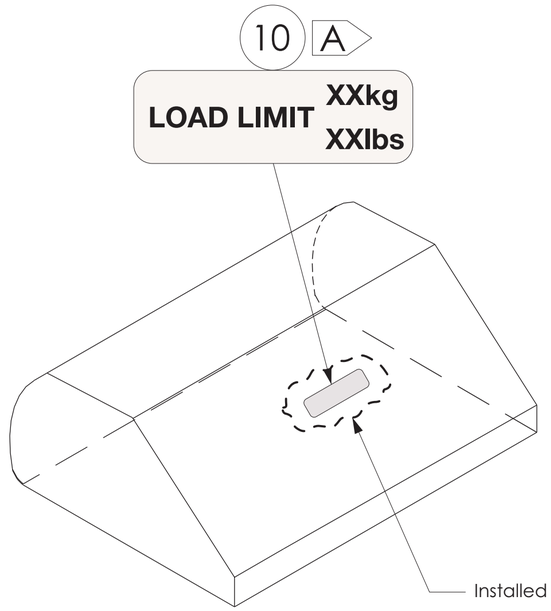

TYPICAL LOAD LIMIT PLACARD INSTALLATION
INSIDE OVERHEAD BIN STOWAGE

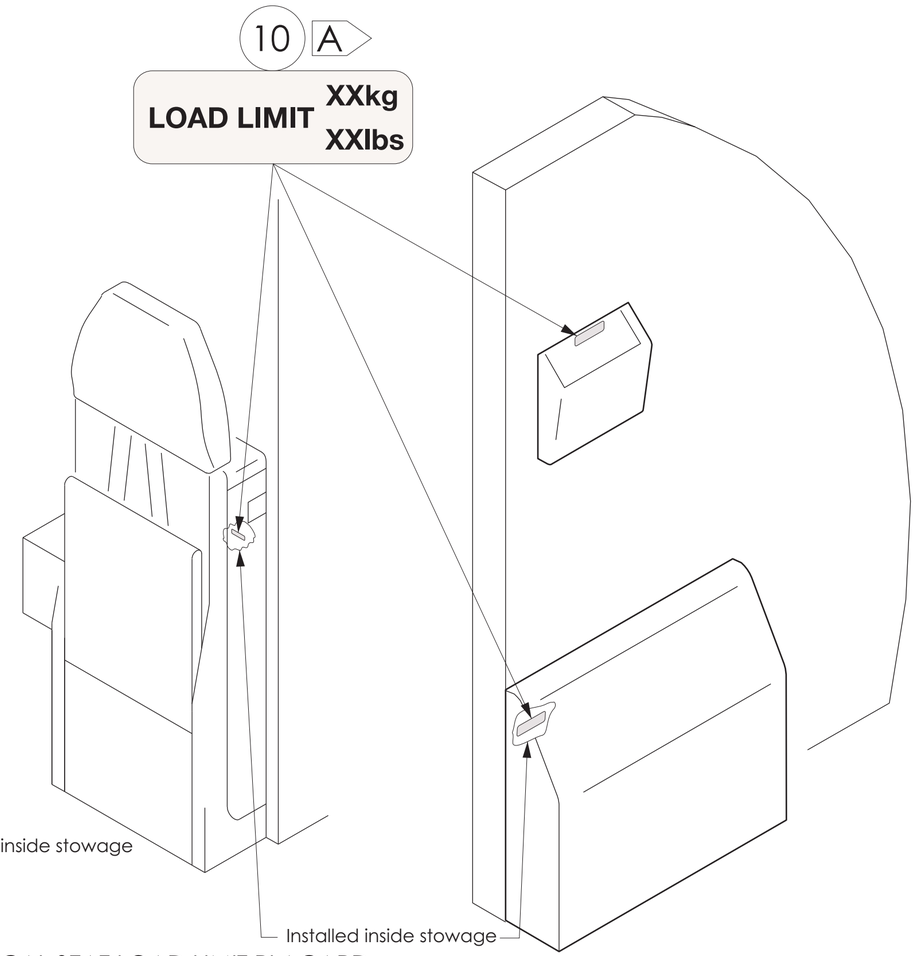

TYPICAL SEAT LOAD LIMIT PLACARD
INSTALLATION ON FLIGHT ATTENDANT SEAT
INSIDE STOWAGE COMPARTMENT

TYPICAL LOAD LIMIT PLACARD
INSTALLATION INSIDE DOG HOUSE
AND ON LITERATURE POCKET

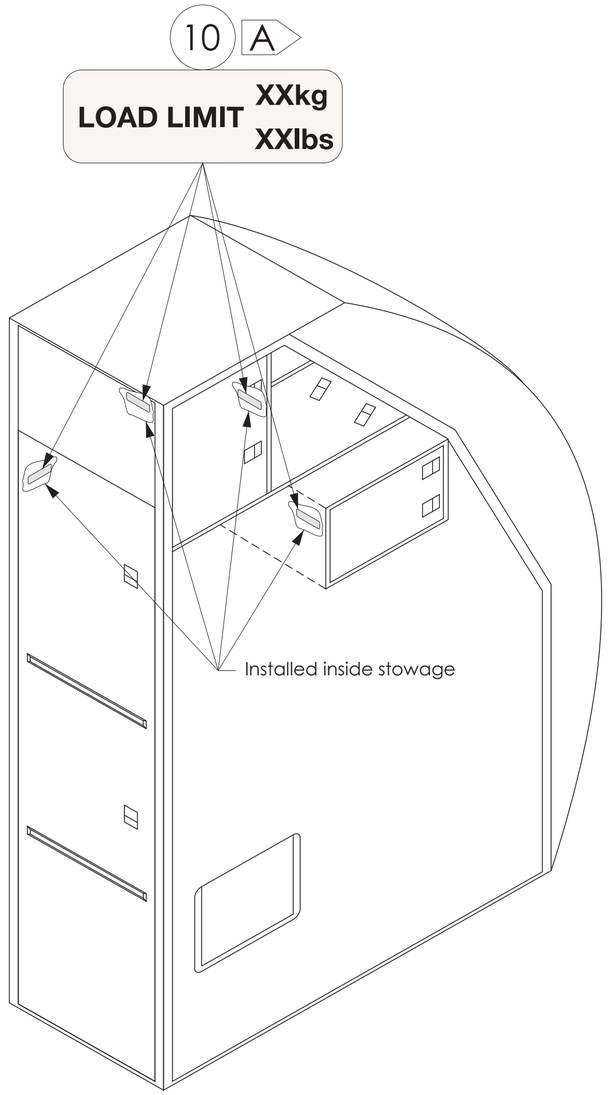

TYPICAL LOAD LIMIT PLACARD INSTALLATION IN
MONUMENTS AND PARTITIONS WITH COMPARTMENTS

DWG SH NOTES: A - Refer to current AIPC or CMM or TC Holder drawings or approved modification for each stowage load limit.

B - Only typical load limit location shown, load limit placards can be installed in other location depending on AC configuration. Refer to AC customized documentation for load limits and placard locations.

© J&C AERO EEU LTD. OWN THE COPYRIGHT OF THIS DRAWING AND IT SHALL NOT BE REPRODUCED BY ANY OTHER WITHOUT THE PRIOR WRITTEN PERMISSION

(CONT.) 8.2 STOWAGE LOAD LIMIT

ITEM NR.	OEM PART NUMBER (FOR REFERENCE ONLY)	ALTERNATIVE EPA PART NUMBER	DESCRIPTION	LAYOUT	SIZE (WXH); LETTERS HEIGHT	COLOR INDEX	MATERIAL COMBINATION	IPC/DWG REFERENCE	NOTE
10	D2527702645100	JC320E020A01	LOAD LIMIT	LOAD LIMIT 1,5kg 3,3lbs EPA JC320E020A01	85X27 6	4.3 4.7	E	11-42-25	
	D2527702645100	JC320E020A22	LOAD LIMIT	LOAD LIMIT 16kg 35,2lbs EPA JC320A020A22	85X27 6	4.3 4.7	E	11-32-25	
	D2528913145300	JC320E020A03	LOAD LIMIT	LOAD LIMIT 5kg 11lbs EPA JC320E020A03	85X27 6	4.3 4.7	E	11-42-25	
	D2529333145600	JC320E020A30	LOAD LIMIT	LOAD LIMIT 7kg 15,5lbs EPA JC320E020A30	85X27 6	4.3 4.7	E	11-52-25	
	D2527710944300 D2527700844300	JC320E020A04	LOAD LIMIT	LOAD LIMIT 8kg 17,5lbs EPA JC320E020A04	85X27 6	4.3 4.7	E	11-42-25 11-32-25	
	D2527700844400 D2527700044400	JC320E020A05	LOAD LIMIT	LOAD LIMIT 9kg 20lbs EPA JC320E020A05	85X27 6	4.3 4.7	E	11-42-25 11-32-25	
	D2527719944000	JC320E020A06	LOAD LIMIT	LOAD LIMIT 10kg 22lbs EPA JC320E020A06	85X27 6	4.3 4.7	E	11-42-25	
	D2527705745400	JC320E020A07	LOAD LIMIT	LOAD LIMIT 13kg 28lbs EPA JC320A020C07	85X27 6	4.3 4.7	E	11-42-25	

© J&C AERO EEU LTD. OWN THE COPYRIGHT OF THIS DRAWING AND IT SHALL NOT BE REPRODUCED BY ANY OTHER WITHOUT THE PRIOR WRITTEN PERMISSION

(CONT.) 8.2 STOWAGE LOAD LIMIT

ITEM NR.	OEM PART NUMBER (FOR REFERENCE ONLY)	ALTERNATIVE EPA PART NUMBER	DESCRIPTION	LAYOUT	SIZE (WXH); LETTERS HEIGHT	COLOR INDEX	MATERIAL COMBINATION	IPC/DWG REFERENCE	NOTE
10	N/A	JC320E020A08	LOAD LIMIT	LOAD LIMIT 14kg 31lbs EPA JC320E020A08	85X27 6	4.3 4.7	E	N/A	
	D2527700844500 D2527700044500	JC320E020A09	LOAD LIMIT	LOAD LIMIT 15kg 33lbs EPA JC320E020A09	85X27 6	4.3 4.7	E	11-42-25 11-32-25	
	D2529333545700	JC320E020A45	LOAD LIMIT	LOAD LIMIT 18kg 39,6lbs EPA JC320E020A45	85X27 6	4.3 4.7	E	11-52-25	
	D2527700844100 D2527700044100	JC320E020A10	LOAD LIMIT	LOAD LIMIT 19kg 42lbs EPA JC320E020A10	85X27 6	4.3 4.7	E	11-42-25 11-32-25	
	A2528131544600	JC320E020A11	LOAD LIMIT	LOAD LIMIT 20kg 44lbs EPA JC320E020A11	85X27 6	4.3 4.7	E	11-42-25	
	A2528131544700	JC320E020A13	LOAD LIMIT	LOAD LIMIT 25kg 55lbs EPA JC320E020A13	85X27 6	4.3 4.7	E	11-42-25	
	F2527705143100	JC320E020A14	LOAD LIMIT	LOAD LIMIT 30kg 66lbs EPA JC320E020A14	85X27 6	4.3 4.7	E	11-32-25	

© J&C AERO EEU LTD. OWN THE COPYRIGHT OF THIS DRAWING AND IT SHALL NOT BE REPRODUCED BY ANY OTHER WITHOUT THE PRIOR WRITTEN PERMISSION

(CONT.) 8.2 STOWAGE LOAD LIMIT

ITEM NR.	OEM PART NUMBER (FOR REFERENCE ONLY)	ALTERNATIVE EPA PART NUMBER	DESCRIPTION	LAYOUT	SIZE (WXH); LETTERS HEIGHT	COLOR INDEX	MATERIAL COMBINATION	IPC/DWG REFERENCE	NOTE
10	D2527700044200 D2527700844200	JC320E020A15	LOAD LIMIT	LOAD LIMIT 38kg 84lbs EPA JC320E020A15	85X27 6	4.3 4.7	E	11-42-25 11-32-25	
	N/A	JC320E020A65	LOAD LIMIT	LOAD LIMIT 2,3kg 5lbs EPA JC320E020A65	85X27 6	4.3 4.7	E	N/A	
	N/A	JC320E020A17	LOAD LIMIT	LOAD LIMIT 28kg 61,6lbs EPA JC320E020A17	85X27 6	4.3 4.7	E	N/A	
	N/A	JC320E020A02	LOAD LIMIT	LOAD LIMIT 3kg 6,6lbs EPA JC320E020A02	85X27 6	4.3 4.7	E	N/A	
	N/A	JC320E020A12	LOAD LIMIT	LOAD LIMIT 22,5kg 49,6lbs EPA JC320E020A12	85X27 6	4.3 4.7	E	N/A	
	N/A	JC320E020A23	LOAD LIMIT	LOAD LIMIT 23kg 51lbs EPA JC320E020A23	85X27 6	4.3 4.7	E	N/A	
	N/A	JC320E020A24	LOAD LIMIT	LOAD LIMIT 45kg 99lbs EPA JC320E020A24	85X27 6	4.3 4.7	E	N/A	

© J&C AERO EEU LTD. OWN THE COPYRIGHT OF THIS DRAWING AND IT SHALL NOT BE REPRODUCED BY ANY OTHER WITHOUT THE PRIOR WRITTEN PERMISSION

(CONT.) 8.2 STOWAGE LOAD LIMIT

ITEM NR.	OEM PART NUMBER (FOR REFERENCE ONLY)	ALTERNATIVE EPA PART NUMBER	DESCRIPTION	LAYOUT	SIZE (WXH); LETTERS HEIGHT	COLOR INDEX	MATERIAL COMBINATION	IPC/DWG REFERENCE	NOTE
10	D2527707344700 D2528628144600	JC320E020A26	LOAD LIMIT	LOAD LIMIT 21kg 46lbs EPA JC320E020A26	85X27 6	4.3 4.7	E	11-42-25 11-32-25	
	D2527711345500	JC320E020A27	LOAD LIMIT	LOAD LIMIT 90kg 198lbs EPA JC320E020A27	85X27 6	4.3 4.7	E	11-42-25	
	D2528634344600	JC320E020A28	LOAD LIMIT	LOAD LIMIT 31kg 68lbs EPA JC320E020A28	85X27 6	4.3 4.7	E	11-42-25	
	11D10103-1	JC320E020A29	LOAD LIMIT	LOAD LIMIT 41kg 90lbs EPA JC320E020A29	85X27 6	4.3 4.7	E	N/A	
	D2528913145700	JC320E020A36	LOAD LIMIT	LOAD LIMIT 32kg 70,5lbs EPA JC320E020A36	85X27 6	4.3 4.7	E	11-32-25	
	D2528913145600	JC320E020A32	LOAD LIMIT	LOAD LIMIT 6kg 13lbs EPA JC320E020A32	85X27 6	4.3 4.7	E	11-52-25	

© J&C AERO EEU LTD. OWN THE COPYRIGHT OF THIS DRAWING AND IT SHALL NOT BE REPRODUCED BY ANY OTHER WITHOUT THE PRIOR WRITTEN PERMISSION

DRAWING NUMBER: HES113JCAERO2099

8.3 EXIT DOORS

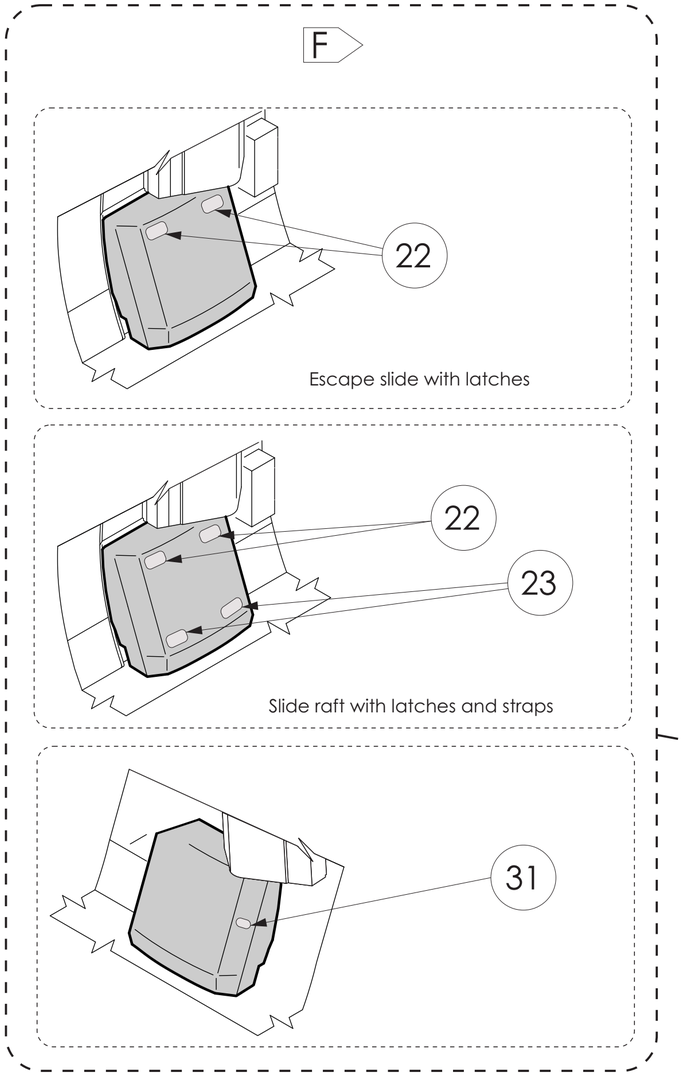

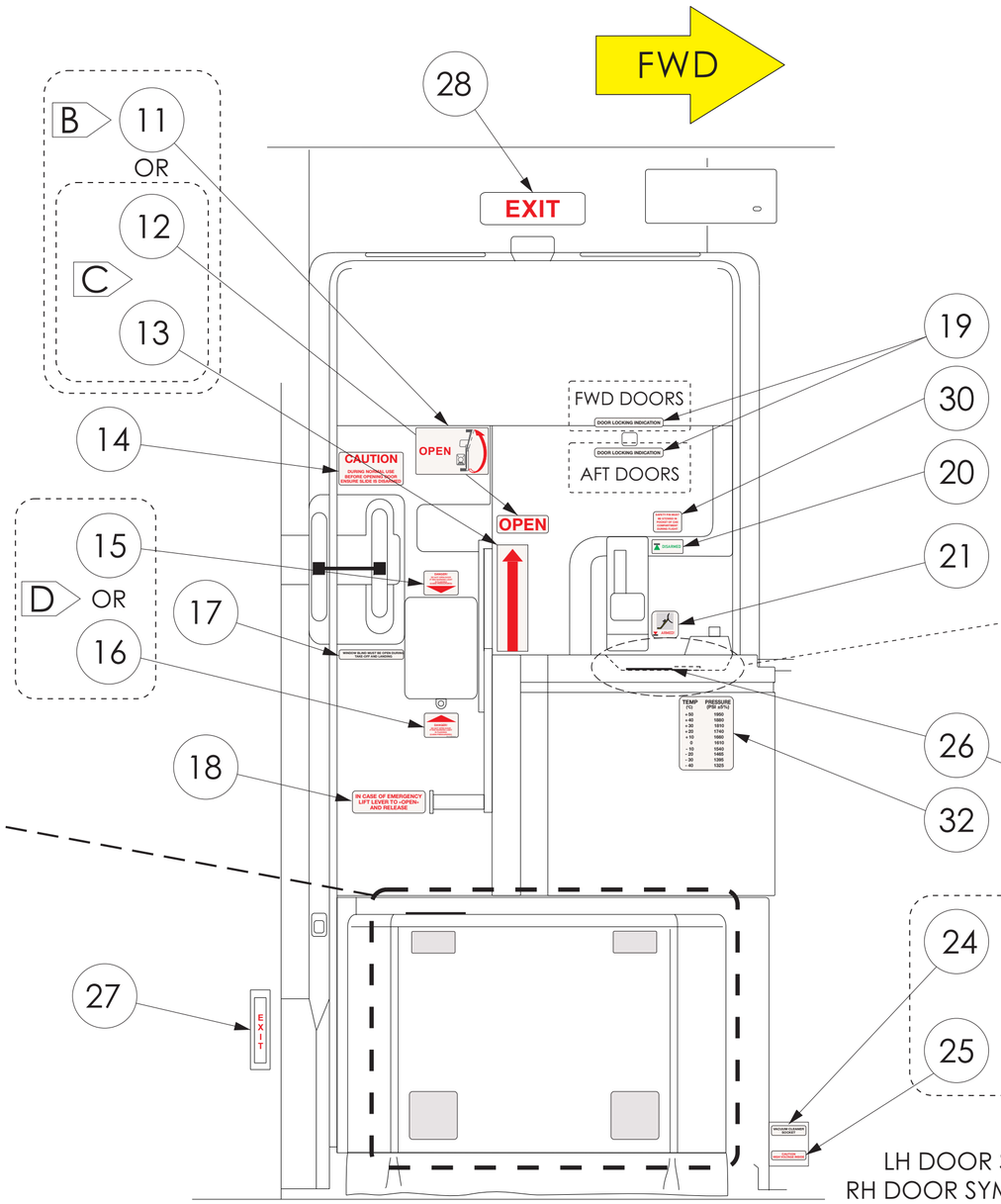

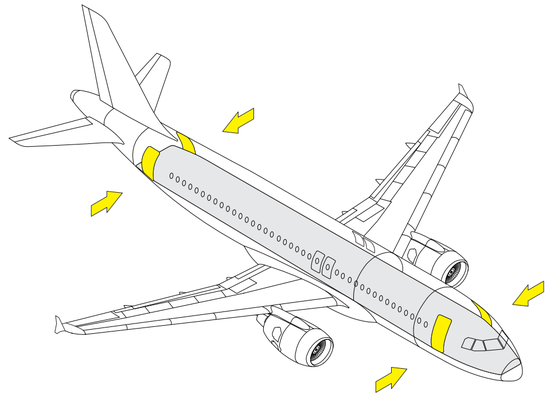

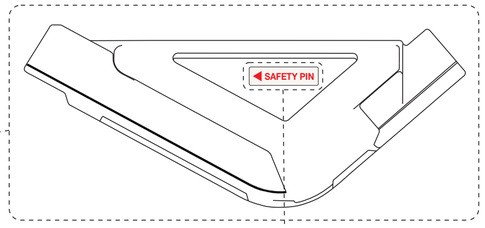

SAFETY PIN
FWD LH AND AFT RH DOOR

SAFETY PIN
FWD RH AND AFT LH DOOR

DWG SH NOTES:

A - Refer to current AIPC or CMM or TC Holder drawings or approved modification for applicable placards.

B - For doors without JAR26 operation.

C - For doors with JAR26 operation.

D - For applicable placard and location refer to AIPC.

E - Install on FWD RH door, AFT LH door.

F - To be selected with slide configuration.

J&C AERO EEU EASA APPROVAL NO: EASA.21J.580	WWW.THISISDOA.EU INFO@THISISDOA.EU PHONE: +353 15 269768	AIRCRAFT: SEE TABLE 1	TOLERANCES OVERALL PLACARD DIMENSIONS ±1MM; RADIUS ±1MM; LETTERING/GRAPHIC DIMENSIONS +1.0/-0.5 MM; INSTALLATION ±4MM; ANGULAR ±5°.	DRAWN BY: SEE JCAERO/ECN/2099
	MSN: SEE TABLE 1	REGISTRATION: -	SCALE: NTS / SIZE: A2 / ALL DIMENSIONS ARE MILLIMETERS / THIRD ANGLE PROJECTION	CHECKED BY: SEE JCAERO/ECN/2099
	TITLE: INTERIOR PLACARDS ILLUSTRATED CATALOGUE			
	DRAWING NUMBER: HES113JCAERO2099		SHEET 41 OF 98	REV. C

© J&C AERO EEU LTD. OWN THE COPYRIGHT OF THIS DRAWING AND IT SHALL NOT BE REPRODUCED BY ANY OTHER WITHOUT THE PRIOR WRITTEN PERMISSION

(CONT.) 8.3 EXIT DOOR

ITEM NR.	OEM PART NUMBER (FOR REFERENCE ONLY)	ALTERNATIVE EPA PART NUMBER	DESCRIPTION	LAYOUT	SIZE (WXH); LETTERS HEIGHT	COLOR INDEX	MATERIAL COMBINATION	IPC/DWG REFERENCE	NOTE
11	D2528909420000	JC320E022A01	OPEN	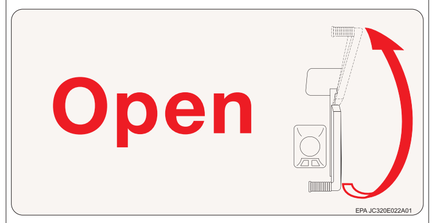	180X90 25	4.1 4.3 4.7	E	11-32-52	INSTALL ON LH DOOR
	D2528909420100	JC320E022A02	OPEN	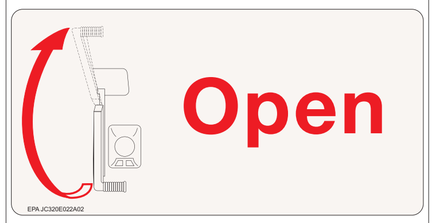	180X90 25	4.1 4.3 4.7	E	11-32-52	INSTALL ON RH DOOR
12	D2527714723700	JC320E022A03	OPEN		108X38 25	4.1 4.3	E	11-32-52	
13	G2527705023100	JC320E022A04	ARROW		290X60 SHAFT WIDTH - 25 HEAD WIDTH - 50	4.1 4.3	E	11-32-52	
14	D2527711222800	JC320E022A05	CAUTION DURING NORMAL USE BEFORE OPENING DOOR ENSURE SLIDE IS DISARMED		150x80 20; 7	4.1 4.3	E	D25277112	

© J&C AERO EEU LTD. OWN THE COPYRIGHT OF THIS DRAWING AND IT SHALL NOT BE REPRODUCED BY ANY OTHER WITHOUT THE PRIOR WRITTEN PERMISSION

(CONT.) 8.3 EXIT DOOR

ITEM NR.	OEM PART NUMBER (FOR REFERENCE ONLY)	ALTERNATIVE EPA PART NUMBER	DESCRIPTION	LAYOUT	SIZE (WXH); LETTERS HEIGHT	COLOR INDEX	MATERIAL COMBINATION	IPC/DWG REFERENCE	NOTE
15	F2527705028000	JC320E022A06	DANGER! DO NOT OPEN DOOR IF RED WARNING LIGHT IS FLASHING	DANGER! DO NOT OPEN DOOR IF RED WARNING LIGHT IS FLASHING (CABIN PRESSURIZED!) EPA JC320E022A06	87X62 6; 4	4.1 4.3	E	11-32-52	
16	D2527700828000	JC320E022A07	DANGER! DO NOT OPEN DOOR IF RED WARNING LIGHT IS FLASHING	DANGER! DO NOT OPEN DOOR IF RED WARNING LIGHT IS FLASHING (CABIN PRESSURIZED!) EPA JC320E022A07	87X62 6; 4	4.1 4.3	E	11-32-52	
17	D2527710921800 F2527709421800	JC320E022A82	WINDOW BLIND MUST BE OPEN DURING TAKE OFF AND LANDING	WINDOW BLIND MUST BE OPEN DURING TAKE-OFF AND LANDING EPA JC320E022A82	110X35 6	4.3 4.7	E	11-32-52	
18	D2527700820200	JC320E022A09	IN CASE OF EMERGENCY LIFT LEVER TO OPEN AND RELEASE	IN CASE OF EMERGENCY LIFT LEVER TO «OPEN» AND RELEASE EPA JC320E022A09	115X35 6	4.1 4.3	E	11-32-52	
	F2527705122200 D2528840922200 D2528629022200	JC320E022A36	IN CASE OF EMERGENCY 1. PULL COVER ASIDE 2. LIFT LEVER TO "OPEN" AND RELEASE	In case of emergency 1. Pull cover aside 2. Lift lever to «Open» and release EPA JC320E022A36	145X55 8	4.1 4.3	E	11-32-52	
	A2528130020600 D2528840920700 D2528629020600	JC320E022A37	PULL COVER TO OPEN	PULL COVER TO OPEN EPA JC320E022A37	130X17 6	4.1 4.3	E	11-32-52	

© J&C AERO EEU LTD. OWN THE COPYRIGHT OF THIS DRAWING AND IT SHALL NOT BE REPRODUCED BY ANY OTHER WITHOUT THE PRIOR WRITTEN PERMISSION

(CONT.) 8.3 EXIT DOOR

ITEM NR.	OEM PART NUMBER (FOR REFERENCE ONLY)	ALTERNATIVE EPA PART NUMBER	DESCRIPTION	LAYOUT	SIZE (WXH); LETTERS HEIGHT	COLOR INDEX	MATERIAL COMBINATION	IPC/DWG REFERENCE	NOTE
19	D2527710920500 D2527700820500	JC320E022A10	DOOR LOCKING INDICATION		130X17 6	4.3 4.7	E	11-32-52	
20	D2528909421700	JC320E022A11	DISARMED		80x30 6	4.2 4.3 4.7	E	11-32-52	
	D2527712321700	JC320E022A85	MANUAL		80x30 6	4.2 4.3 4.7	E	11-32-52	
21	D2528909421600	JC320E022A12	ARMED		56X56 6	4.1 4.3 4.4 4.7 4.9	E	11-32-52	
	D2527712321600	JC320E022A86	AUTOMATIC		56X56 5	4.1 4.3 4.4 4.7 4.9	E	11-32-52	

© J&C AERO EEU LTD. OWN THE COPYRIGHT OF THIS DRAWING AND IT SHALL NOT BE REPRODUCED BY ANY OTHER WITHOUT THE PRIOR WRITTEN PERMISSION

(CONT.) 8.3 EXIT DOOR

ITEM NR.	OEM PART NUMBER (FOR REFERENCE ONLY)	ALTERNATIVE EPA PART NUMBER	DESCRIPTION	LAYOUT	SIZE (WXH); LETTERS HEIGHT	COLOR INDEX	MATERIAL COMBINATION	IPC/DWG REFERENCE	NOTE
22	D2527716120000	JC320E022A14	LOCKED UNLOCKED	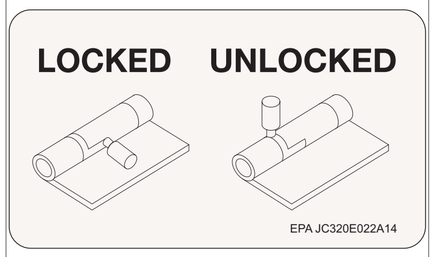	96X55 6	4.3 4.7	E	11-32-52	
23	D2527700822200	JC320E022A15	LATCH RELEASE	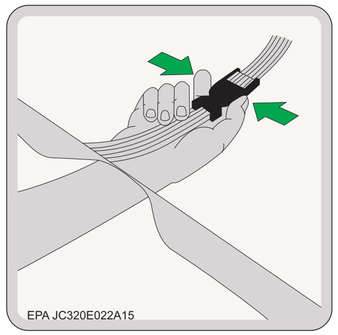	75X75	4.2 4.3 4.4 4.7	E	11-32-52	
24	D2527710940100	JC320E022A16	VACCUM CLEANER SOCKET		93X26 6	4.3 4.7	E	11-32-31	
25	NSA931031R02	JC320E022A17	CAUTION HIGH VOLTAGE INSIDE		102X26 6	4.1 4.3	E	11-32-31	
26	D2527719922500	JC320E022A18	SAFETY PIN RIGHT		64X20 6	4.1 4.3	E	11-32-52	INSTALL ON FWD LH AND AFT RH DOORS
	D2527719922400	JC320E022A19	SAFETY PIN LEFT		64X20 6	4.1 4.3	E	11-32-52	INSTALL ON FWD RH AND AFT RH DOORS

© J&C AERO EEU LTD. OWN THE COPYRIGHT OF THIS DRAWING AND IT SHALL NOT BE REPRODUCED BY ANY OTHER WITHOUT THE PRIOR WRITTEN PERMISSION

(CONT.) 8.3 EXIT DOOR

ITEM NR.	OEM PART NUMBER (FOR REFERENCE ONLY)	ALTERNATIVE EPA PART NUMBER	DESCRIPTION	LAYOUT	SIZE (WXH); LETTERS HEIGHT	COLOR INDEX	MATERIAL COMBINATION	IPC/DWG REFERENCE	NOTE
27	D2527710521700	JC320E022A20	DO NOT SIT HERE SLIDE RAFT	DO NOT SIT HERE ESCAPE SLIDE TO REMOVE COVER, PULL COVER OFF EPA JC320E022A20	118x42 4; 6; 10	4.1 4.3	E	11-32-52	
28	D2527710521600	JC320E022A21	DO NOT SIT HERE ESCAPE SLIDE	DO NOT SIT HERE ESCAPE SLIDE TO REMOVE COVER, UNLOCK LATCHES AND PULL COVER OFF EPA JC320E022A21	118x47 4; 6; 10	4.1 4.3	E	11-32-52	
29	D2527716120200	JC320E022A30	DO NOT SIT HERE ESCAPE SLIDE	Do not sit here Slide raft To remove cover, release straps underneath and pull cover off EPA JC320E022A30	140X55 10; 5	4.1 4.3	E	11-32-52	
30	D252883782300	JC320E022A35	SAFETY PIN MUST BE STOWED	SAFETY PIN MUST BE STOWED IN POCKET OF CAS COMPARTMENT DURING FLIGHT EPA JC320E022A35	65X47 4	4.1 4.3	E	11-32-52	
31	D2527720029000	JC320E022A26	DOOR ARMED INDICATOR	DOOR ARMED INDICATOR EPA JC320E022A26	70X26 6	4.1 4.3	E	11-32-52	

© J&C AERO EEU LTD. OWN THE COPYRIGHT OF THIS DRAWING AND IT SHALL NOT BE REPRODUCED BY ANY OTHER WITHOUT THE PRIOR WRITTEN PERMISSION

(CONT.) 8.3 EXIT DOOR

ITEM NR.	OEM PART NUMBER (FOR REFERENCE ONLY)	ALTERNATIVE EPA PART NUMBER	DESCRIPTION	LAYOUT	SIZE (WXH); LETTERS HEIGHT	COLOR INDEX	MATERIAL COMBINATION	IPC/DWG REFERENCE	NOTE
32	D2527710920800 D2527700820800	JC320E022A13	TEMP PRESSURE	TEMP [°C] / PRESSURE [PSI ±5%] +50 / 1950 +40 / 1880 +30 / 1810 +20 / 1740 +10 / 1660 0 / 1610 - 10 / 1540 - 20 / 1465 - 30 / 1395 - 40 / 1325 EPA JC320A022A13	87X108 5; 6	4.3 4.7	E	11-32-52	

© J&C AERO EEU LTD. OWN THE COPYRIGHT OF THIS DRAWING AND IT SHALL NOT BE REPRODUCED BY ANY OTHER WITHOUT THE PRIOR WRITTEN PERMISSION

DRAWING NUMBER: HES113JCAERO2099

8.4 OVERWING EMERGENCY EXIT MARKINGS

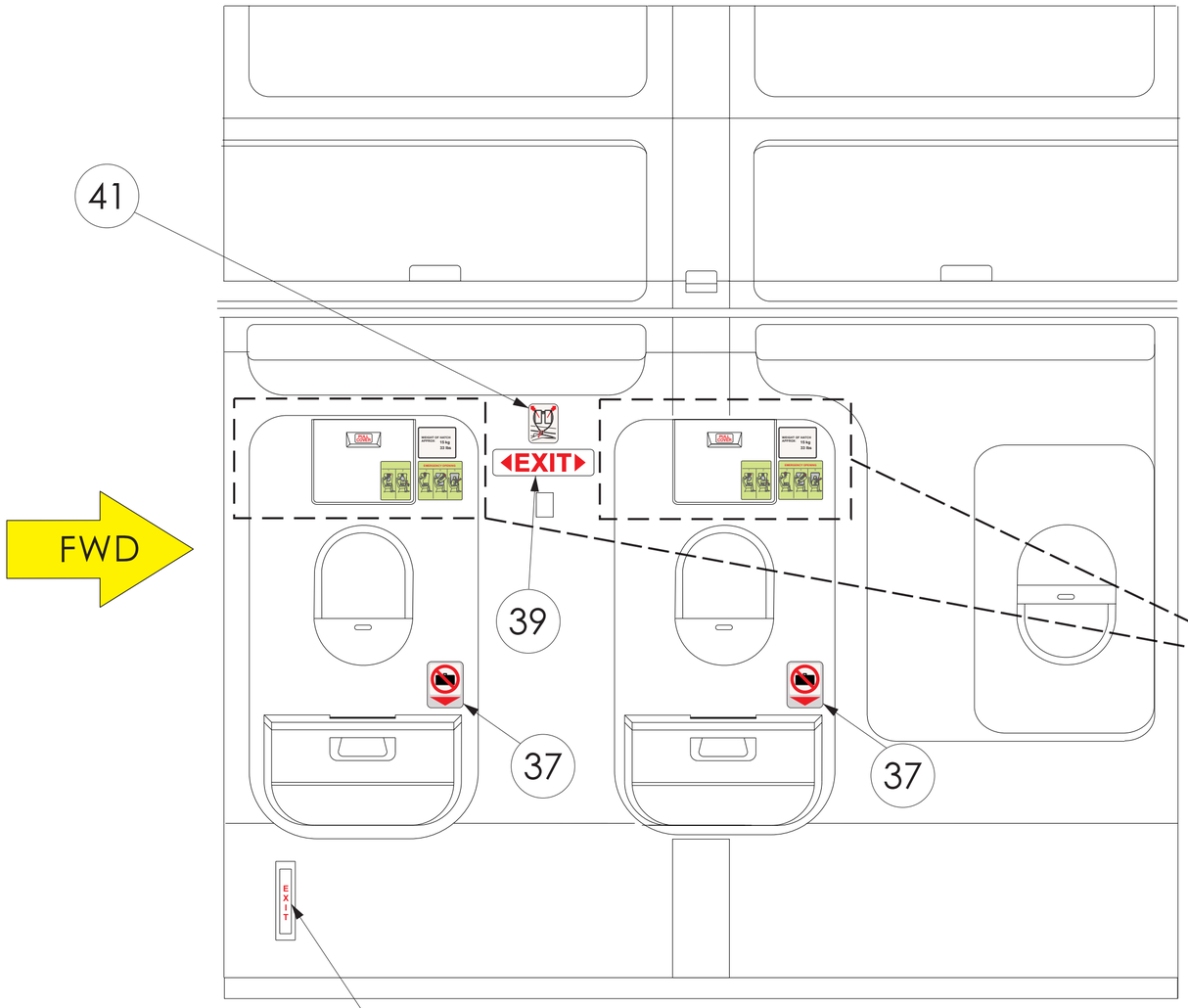

LH EMERGENCY EXIT SHOWN
RH EMERGENCY EXIT SYMMETRICAL

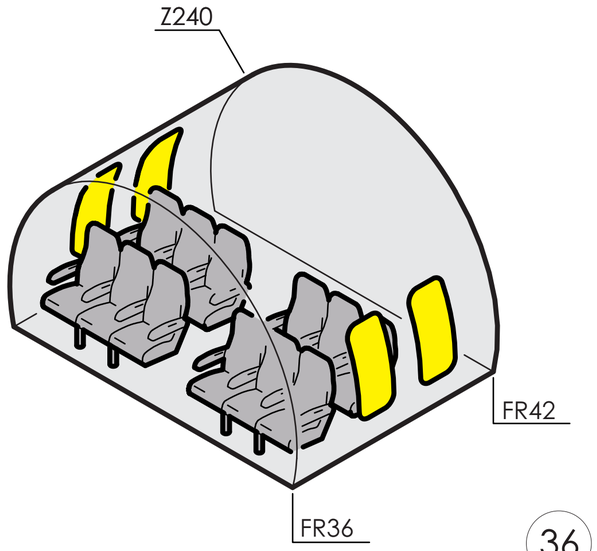

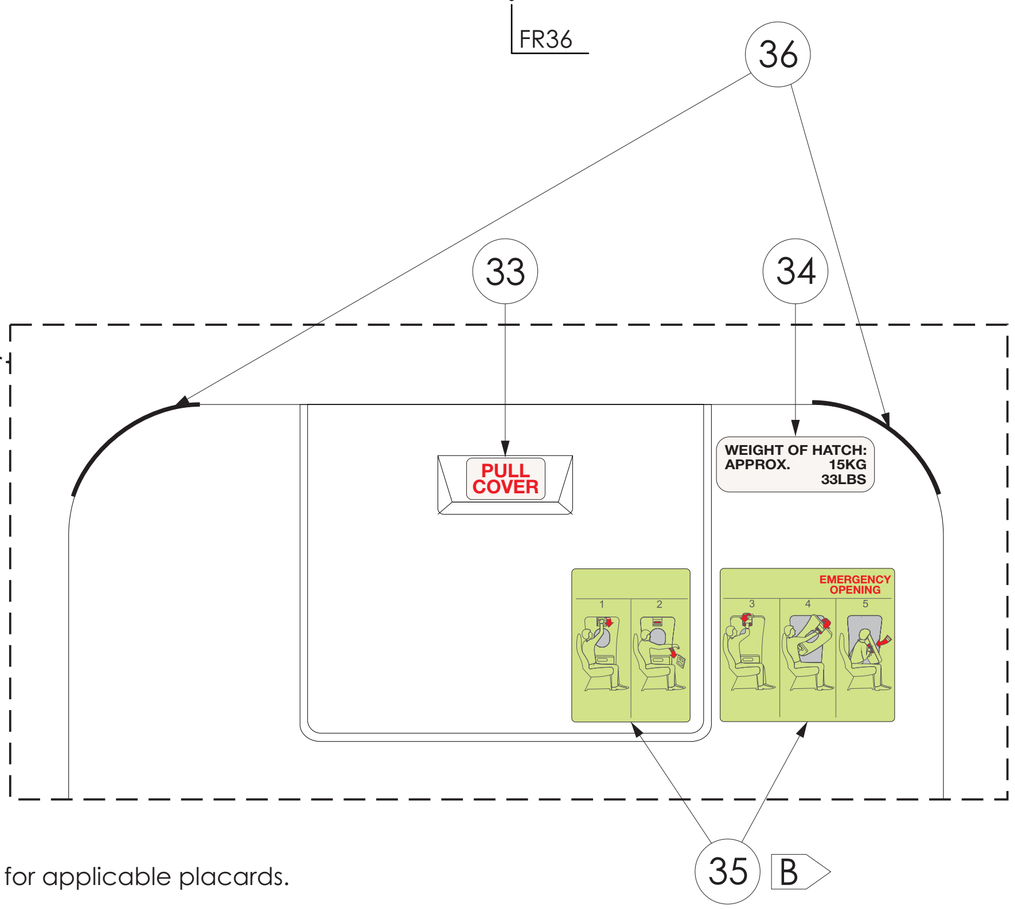

DWG SH NOTES: A - Refer to current AIPC or CMM or TC Holder drawings or approved modification for applicable placards.

B - Only OEM fluorescent placard p/n D2527719922600 and p/n D2527719922700 to be used, cut between 2nd and 3rd panel and install on emergency exit doors .

J&C AERO EEU EASA APPROVAL NO: EASA.21J.580	WWW.THISISDOA.EU INFO@THISISDOA.EU PHONE: +353 15 269768	AIRCRAFT: SEE TABLE 1	TOLERANCES OVERALL PLACARD DIMENSIONS ±1MM; RADIUS ±1MM; LETTERING/GRAPHIC DIMENSIONS +1.0/-0.5 MM; INSTALLATION ±4MM; ANGULAR ±5°.	DRAWN BY: SEE JCAERO/ECN/2099
	MSN: SEE TABLE 1	REGISTRATION: -	SCALE: NTS / SIZE: A2 / ALL DIMENSIONS ARE MILLIMETERS / THIRD ANGLE PROJECTION	CHECKED BY: SEE JCAERO/ECN/2099
	TITLE: INTERIOR PLACARDS ILLUSTRATED CATALOGUE			
	DRAWING NUMBER: HES113JCAERO2099		SHEET 48 OF 98	REV. C

© J&C AERO EEU LTD. OWN THE COPYRIGHT OF THIS DRAWING AND IT SHALL NOT BE REPRODUCED BY ANY OTHER WITHOUT THE PRIOR WRITTEN PERMISSION

DOC/302 ISSUE 1.0

DRAWING NUMBER: HES113JCAERO2099

(CONT.) 8.4 OVERWING EMERGENCY EXIT MARKINGS

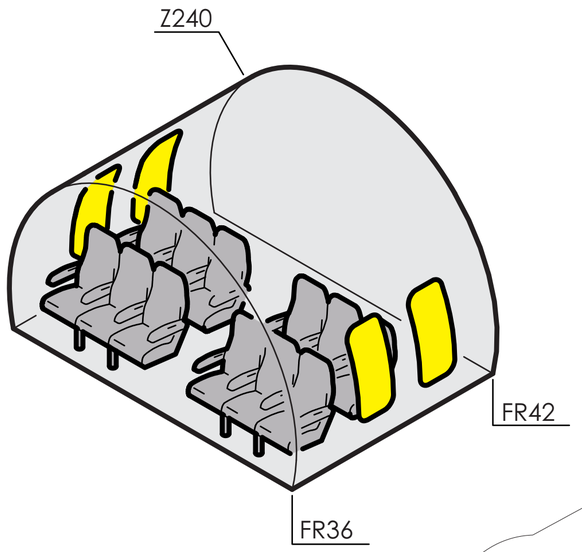

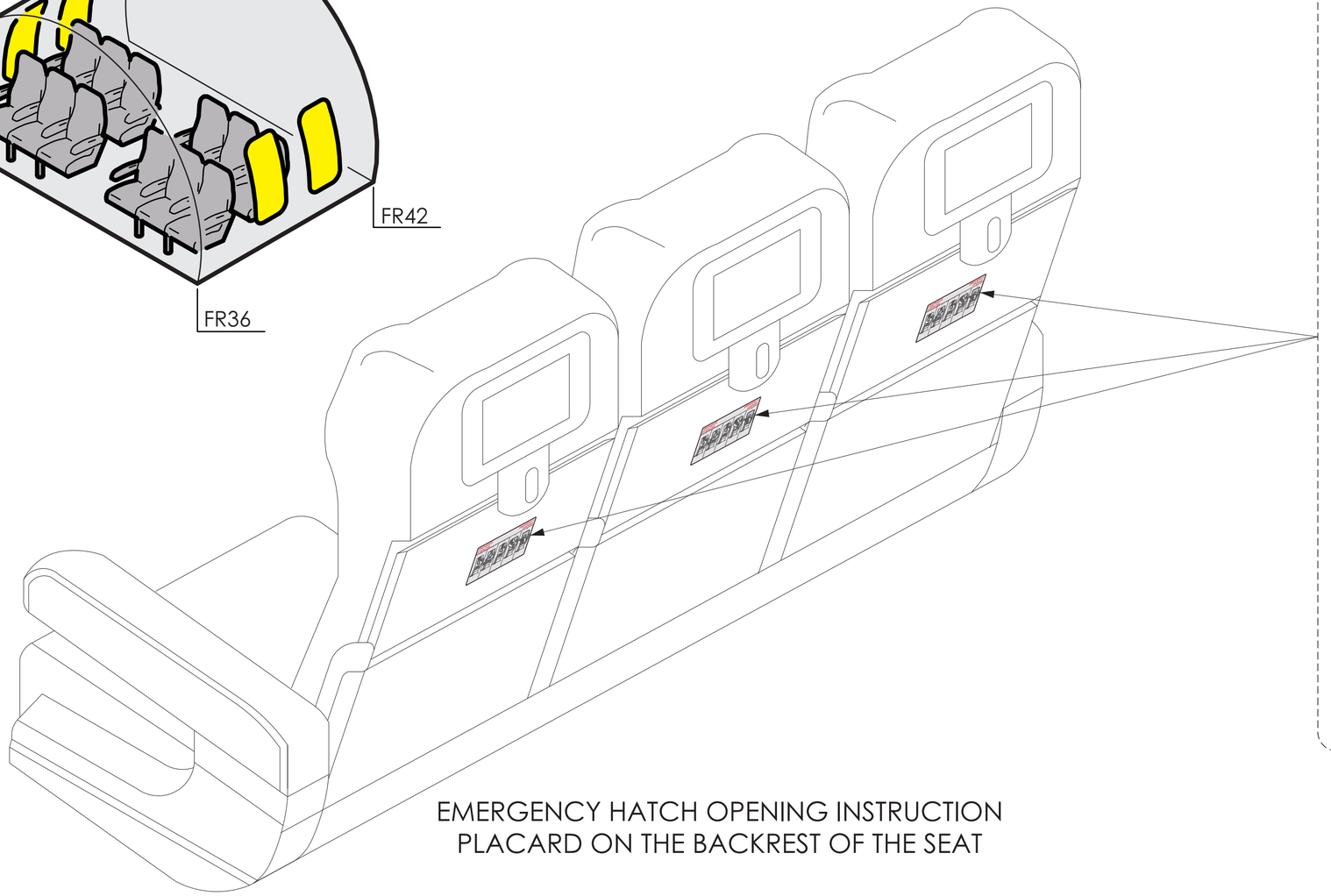

EMERGENCY HATCH OPENING INSTRUCTION
PLACARD ON THE BACKREST OF THE SEAT

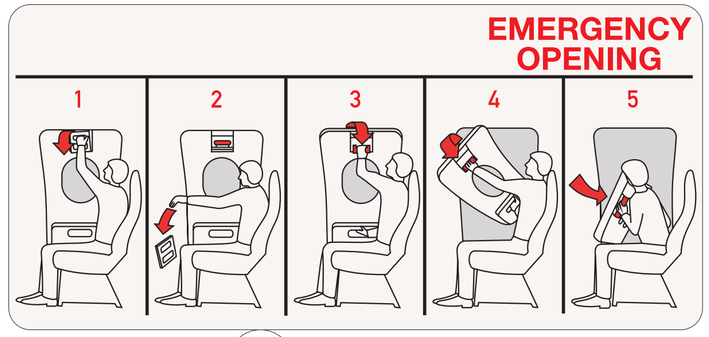

RH SIDE 38 B

LH SIDE 38 B

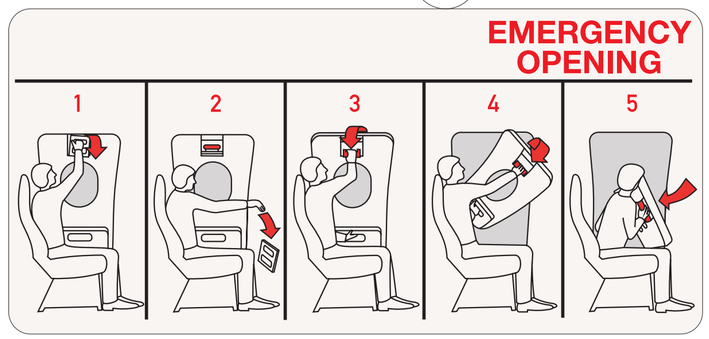

DWG SH NOTES:

A - Refer to current AIPC or CMM or TC Holder drawings or approved modification for applicable placards.

B - To be installed on the back of each seat in front of emergency exits.

C - Placards to be installed on the back of each seat backrest in front of each overwing emergency exit. Placards should be installed on food tray or plastic decorative seat cover approx. at eye level.

J&C AERO EEU
EASA APPROVAL NO: EASA.21J.580
WWW.THISISDOA.EU
INFO@THISISDOA.EU
PHONE: +353 15 269768

AIRCRAFT: SEE TABLE 1	TOLERANCES: OVERALL PLACARD DIMENSIONS ±1MM; RADIUS ±1MM; LETTERING/GRAPHIC DIMENSIONS +1.0/-0.5 MM; INSTALLATION ±4MM; ANGULAR ±5°.		DRAWN BY: SEE JCAERO/ECN/2099
MSN: SEE TABLE 1	REGISTRATION: -	SCALE: NTS / SIZE: A2 / ALL DIMENSIONS ARE MILLIMETERS / THIRD ANGLE PROJECTION	CHECKED BY: SEE JCAERO/ECN/2099
TITLE: INTERIOR PLACARDS ILLUSTRATED CATALOGUE			
DRAWING NUMBER: HES113JCAERO2099		SHEET 49 OF 98	REV. C

© J&C AERO EEU LTD. OWN THE COPYRIGHT OF THIS DRAWING AND IT SHALL NOT BE REPRODUCED BY ANY OTHER WITHOUT THE PRIOR WRITTEN PERMISSION

DOC/302 ISSUE 1.0

(CONT.) 8.4 OVERWING EMERGENCY EXIT MARKINGS

ITEM NR.	OEM PART NUMBER (FOR REFERENCE ONLY)	ALTERNATIVE EPA PART NUMBER	DESCRIPTION	LAYOUT	SIZE (WXH); LETTERS HEIGHT	COLOR INDEX	MATERIAL COMBINATION	IPC/DWG REFERENCE	NOTE
33	D2527700023000	JC320E024A01	PULL COVER		70X37 12	4.1 4.3	E	11-32-52	
34	D2527703846000	JC320E024A02	WEIGHT OF HATCH		97x35 6	4.3 4.7	E	11-32-52	
35	D2527719922600	ONLY OEM PLACARD TO BE USED	EMERGENCY OPENING	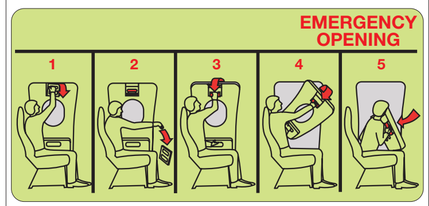	160X75	-	-	11-32-52	FLUORESCENT USE ONLY OEM PLACARD CUT BETWEEN 2ND AND 3RD PANEL AND INSTALL ON LH EMERGENCY EXIT DOORS
	D2527719922700	ONLY OEM PLACARD TO BE USED	EMERGENCY OPENING	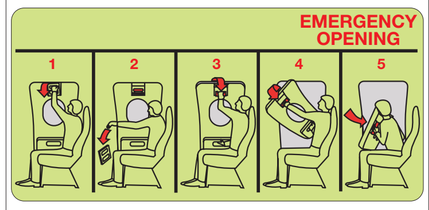	160X75	-	-	11-32-52	FLUORESCENT USE ONLY OEM PLACARD CUT BETWEEN 2ND AND 3RD PANEL AND INSTALL ON RH EMERGENCY EXIT DOORS
36	D2527700822000	JC320E024A03	PULL TO INFLATE		82x17 6	4.3 4.7	E	11-32-52	

© J&C AERO EEU LTD. OWN THE COPYRIGHT OF THIS DRAWING AND IT SHALL NOT BE REPRODUCED BY ANY OTHER WITHOUT THE PRIOR WRITTEN PERMISSION

(CONT.) 8.4 OVERWING EMERGENCY EXIT MARKINGS

ITEM NR.	OEM PART NUMBER (FOR REFERENCE ONLY)	ALTERNATIVE EPA PART NUMBER	DESCRIPTION	LAYOUT	SIZE (WXH); LETTERS HEIGHT	COLOR INDEX	MATERIAL COMBINATION	IPC/DWG REFERENCE	NOTE
37	D25277020408	JC320E024A04	NO STOWAGE		70X90	4.1 4.3 4.4 4.7	E	N/A	
38	D2528908321300 D2527719922900	JC320E024A05	EMERGENCY OPENING	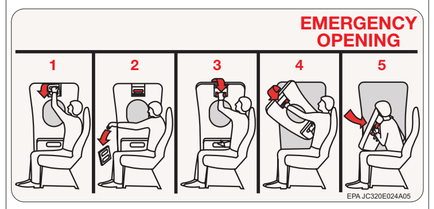	160X75 4; 5	4.1 4.3 4.4 4.7	E	11-32-52	INSTALL ON RH ROW
	D2528908321300 D2527719922900	JC320E024A06	EMERGENCY OPENING	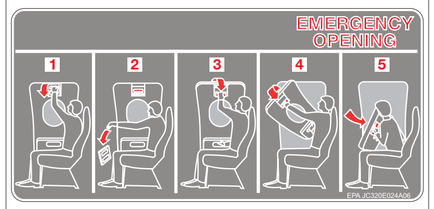	160X75 4; 5	4.1 4.5 4.6 4.8	E	11-32-52	INSTALL ON RH ROW
	D2528908321300 D2527719922900	JC320E024A07	EMERGENCY OPENING	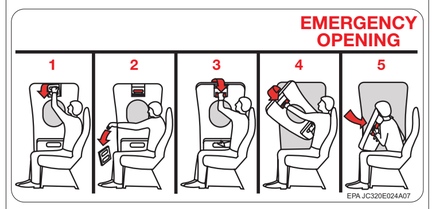	160X75 4; 5	4.1 4.4 4.7 4.8	E	11-32-52	INSTALL ON RH ROW
	D2528908321300 D2527719922900	JC320E024A08	EMERGENCY OPENING	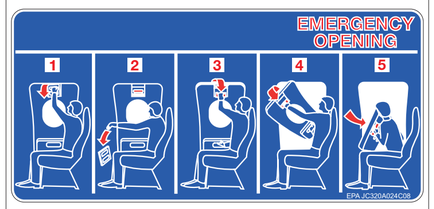	160X75 4; 5	4.1 4.8 4.12	E	11-32-52	INSTALL ON RH ROW

J&C AERO EEU
EASA APPROVAL NO: EASA.21J.580
WWW.THISISDOA.EU
INFO@THISISDOA.EU
PHONE: +353 15 269768

AIRCRAFT: SEE TABLE 1	TOLERANCES: OVERALL PLACARD DIMENSIONS ±1MM; RADIUS ±1MM; LETTERING/GRAPHIC DIMENSIONS +1.0/-0.5 MM; INSTALLATION ±4MM; ANGULAR ±5°.		DRAWN BY: SEE JCAERO/ECN/2099
MSN: SEE TABLE 1	REGISTRATION: -	SCALE: NTS / SIZE: A2 / ALL DIMENSIONS ARE MILLIMETERS / THIRD ANGLE PROJECTION	CHECKED BY: SEE JCAERO/ECN/2099
TITLE: INTERIOR PLACARDS ILLUSTRATED CATALOGUE			
DRAWING NUMBER: HES113JCAERO2099		SHEET 51 OF 98	REV. C

© J&C AERO EEU LTD. OWN THE COPYRIGHT OF THIS DRAWING AND IT SHALL NOT BE REPRODUCED BY ANY OTHER WITHOUT THE PRIOR WRITTEN PERMISSION

(CONT.) 8.4 OVERWING EMERGENCY EXIT MARKINGS

ITEM NR.	OEM PART NUMBER (FOR REFERENCE ONLY)	ALTERNATIVE EPA PART NUMBER	DESCRIPTION	LAYOUT	SIZE (WXH); LETTERS HEIGHT	COLOR INDEX	MATERIAL COMBINATION	IPC/DWG REFERENCE	NOTE
38	D2527719922600 D2527719922800	JC320E024A09	EMERGENCY OPENING	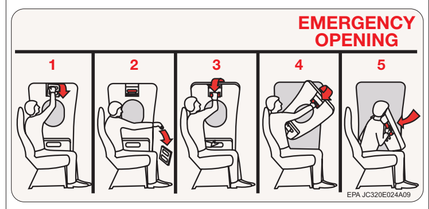	160X75 4; 5	4.1 4.3 4.4 4.7	E	11-32-52	INSTALL ON LH ROW
	D2527719922600 D2527719922800	JC320E024A10	EMERGENCY OPENING	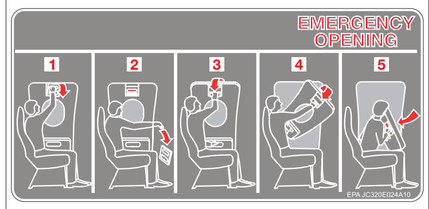	160X75 4; 5	4.1 4.5 4.6 4.8	E	11-32-52	INSTALL ON LH ROW
	D2527719922600 D2527719922800	JC320E024A11	EMERGENCY OPENING	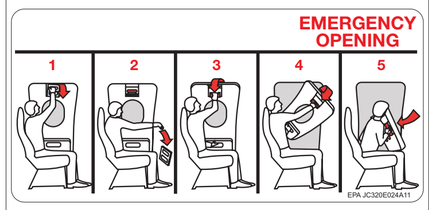	160X75 4; 5	4.1 4.4 4.7 4.8	E	11-32-52	INSTALL ON LH ROW
	D2527719922600 D2527719922800	JC320E024A12	EMERGENCY OPENING	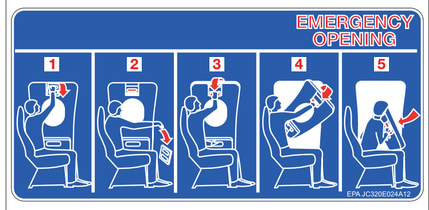	160X75 4; 5	4.1 4.8 4.12	E	11-32-52	INSTALL ON LH ROW
39	F1000600-1	ONLY OEM PART TO BE USED	EXIT		-	-	-	33-51-04	
40	8186-1	ONLY OEM PART TO BE USED	EXIT		-	-	-	33-51-04	

© J&C AERO EEU LTD. OWN THE COPYRIGHT OF THIS DRAWING AND IT SHALL NOT BE REPRODUCED BY ANY OTHER WITHOUT THE PRIOR WRITTEN PERMISSION

(CONT.) 8.4 OVERWING EMERGENCY EXIT MARKINGS

ITEM NR.	OEM PART NUMBER (FOR REFERENCE ONLY)	ALTERNATIVE EPA PART NUMBER	DESCRIPTION	LAYOUT	SIZE (WXH); LETTERS HEIGHT	COLOR INDEX	MATERIAL COMBINATION	IPC/DWG REFERENCE	NOTE
41	D2527700833600	JC320E037A04	LIFE LINE INSTRUCTIONS	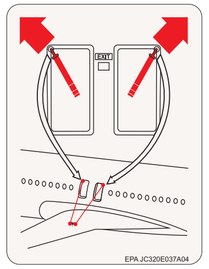	75X100	4.1 4.3 4.7	E	11-32-52	INSTALLED ON AIRCRAFT LH PASSENGER EMERGENCY EXIT
	D2527700833700	JC320E037A05	LIFE LINE INSTRUCTIONS	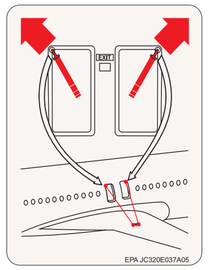	75X100	4.1 4.3 4.7	E	11-32-25	INSTALLED ON AIRCRAFT RH PASSENGER EMERGENCY EXIT

© J&C AERO EEU LTD. OWN THE COPYRIGHT OF THIS DRAWING AND IT SHALL NOT BE REPRODUCED BY ANY OTHER WITHOUT THE PRIOR WRITTEN PERMISSION

DRAWING NUMBER: HES113JCAERO2099

8.5 CURTAINS AND CLASS DIVIDERS

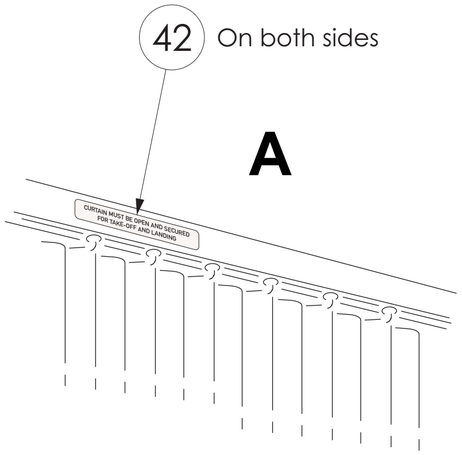

CURTAIN RAIL

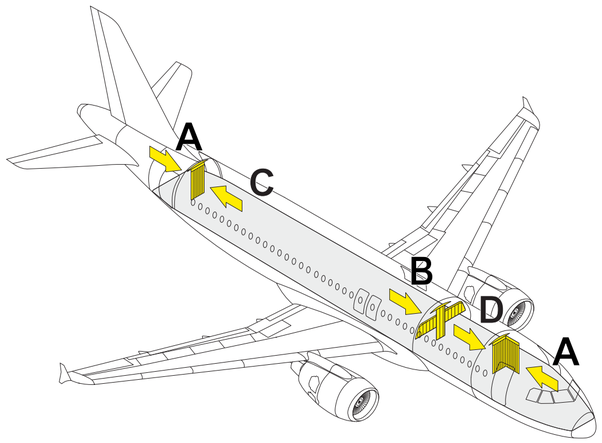

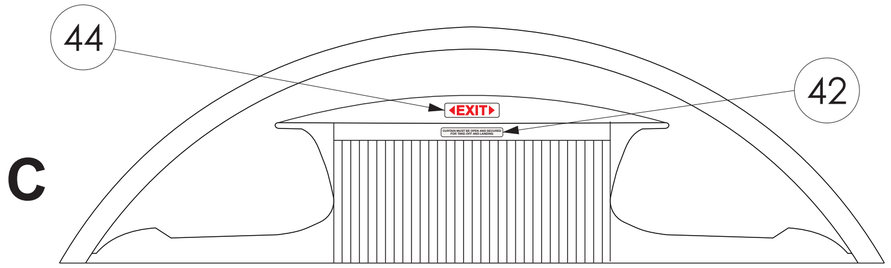

AFT SECTION

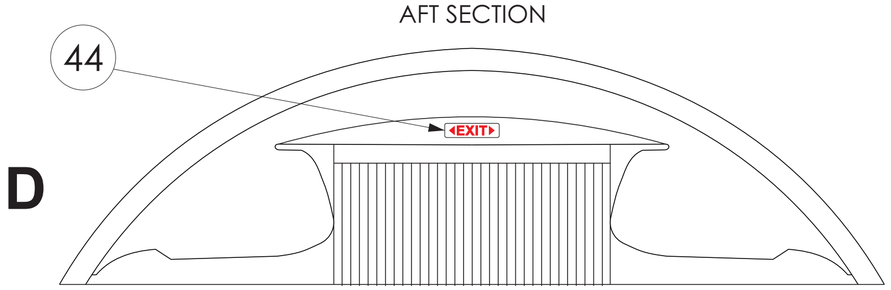

FWD SECTION

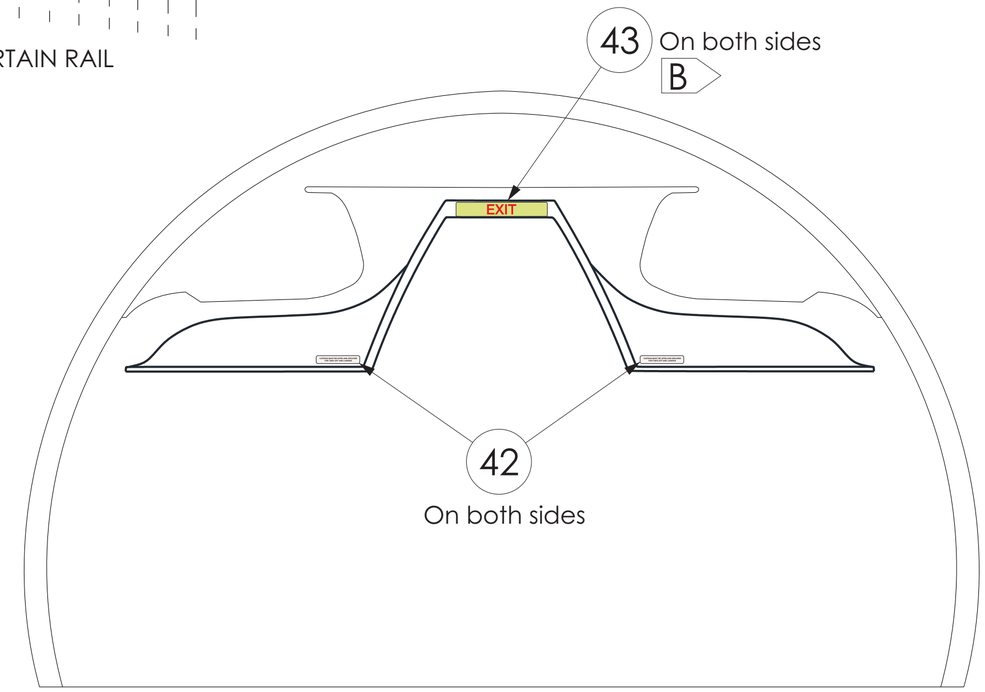

MOVABLE CLASS DIVIDER

B

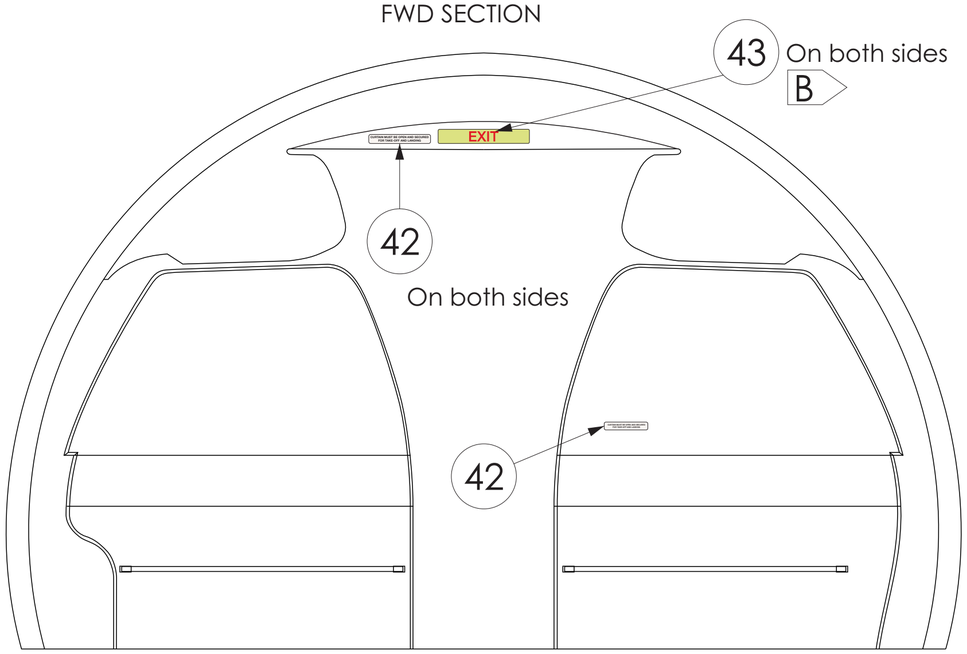

FIXED CLASS DIVIDER

B

DWG SH NOTES: A - Refer to current AIPC or CMM or TC Holder drawings or approved modification for applicable placards and location.

B - Use only OEM fluorescent placard.

J&C AERO EEU EASA APPROVAL NO: EASA.21J.580	WWW.THISISDOA.EU INFO@THISISDOA.EU PHONE: +353 15 269768	AIRCRAFT: SEE TABLE 1	TOLERANCES OVERALL PLACARD DIMENSIONS ±1MM; RADIUS ±1MM; LETTERING/GRAPHIC DIMENSIONS +1.0/-0.5 MM; INSTALLATION ±4MM; ANGULAR ±5°.	DRAWN BY: SEE JCAERO/ECN/2099
	MSN: SEE TABLE 1	REGISTRATION: -	SCALE: NTS / SIZE: A2 / ALL DIMENSIONS ARE MILLIMETERS / THIRD ANGLE PROJECTION	CHECKED BY: SEE JCAERO/ECN/2099
	TITLE: INTERIOR PLACARDS ILLUSTRATED CATALOGUE			
	DRAWING NUMBER: HES113JCAERO2099		SHEET 54 OF 98	REV. C

© J&C AERO EEU LTD. OWN THE COPYRIGHT OF THIS DRAWING AND IT SHALL NOT BE REPRODUCED BY ANY OTHER WITHOUT THE PRIOR WRITTEN PERMISSION

DOC/302 ISSUE 1.0

(CONT.) 8.5 CURTAINS AND CLASS DIVIDERS

ITEM NR.	OEM PART NUMBER (FOR REFERENCE ONLY)	ALTERNATIVE EPA PART NUMBER	DESCRIPTION	LAYOUT	SIZE (WXH); LETTERS HEIGHT	COLOR INDEX	MATERIAL COMBINATION	IPC/DWG REFERENCE	NOTE
42	D2527700843000 F2527709443000	JC320E013A01	CURTAIN MUST BE OPEN AND SECURED		178X26 6	4.3 4.7	E	11-42-25	
43	PL88-826LH00	ONLY OEM PLACARD TO BE USED	EXIT		-	-	-	11-42-25	FLUORESCENT USE ONLY OEM PLACARD
44	F1000600-1	ONLY OEM PART TO BE USED	EXIT		-	-	-	33-51-04	

© J&C AERO EEU LTD. OWN THE COPYRIGHT OF THIS DRAWING AND IT SHALL NOT BE REPRODUCED BY ANY OTHER WITHOUT THE PRIOR WRITTEN PERMISSION

DRAWING NUMBER: HES113JCAERO2099

8.6 COCKPIT DOOR

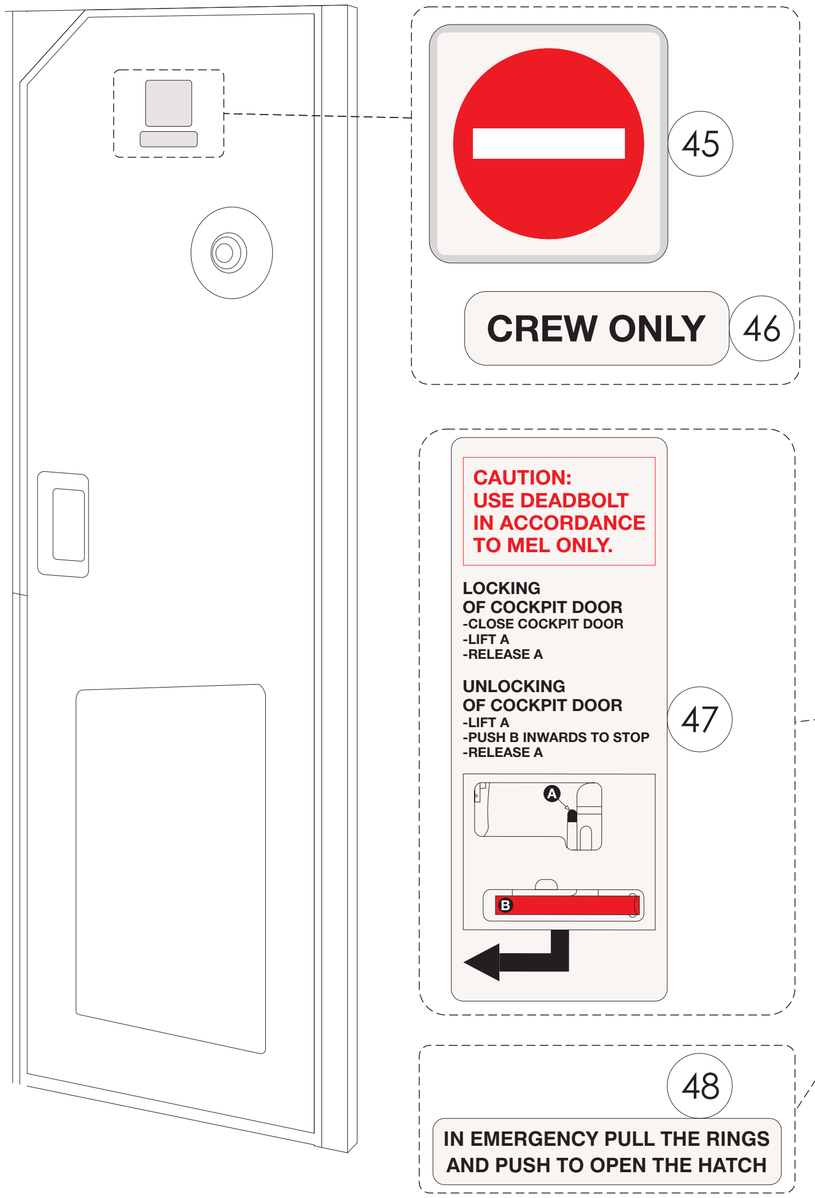

COCKPIT DOOR - VIEW IN FLIGHT DIRECTION

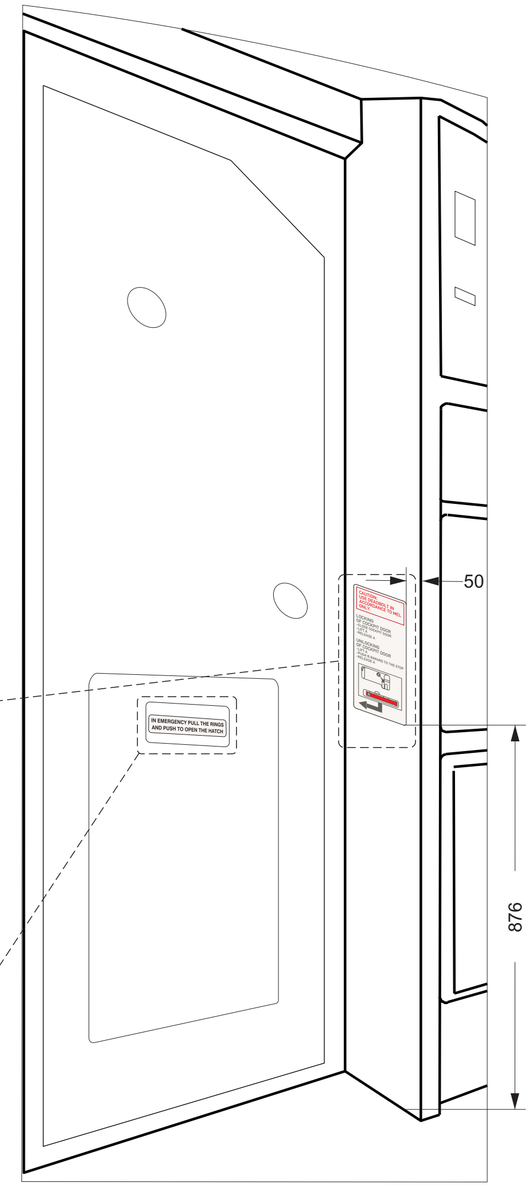

COCKPIT DOOR - VIEW FROM COCKPIT

DGW SH NOTES: A - Refer to current AIPC or CMM or TC Holder drawings or approved modification for applicable placards and location.

J&C AERO EEU
EASA APPROVAL NO: EASA.21J.580

WWW.THISISDOA.EU
INFO@THISISDOA.EU
PHONE: +353 15 269768

AIRCRAFT: SEE TABLE 1

TOLERANCES: OVERALL PLACARD DIMENSIONS ±1MM; RADIUS ±1MM; LETTERING/GRAPHIC DIMENSIONS +1.0/-0.5 MM; INSTALLATION ±4MM; ANGULAR ±5°

DRAWN BY: SEE JCAERO/ECN/2099

MSN: SEE TABLE 1

REGISTRATION: -

SCALE: NTS

SIZE: A2

ALL DIMENSIONS ARE MILLIMETERS

THIRD ANGLE PROJECTION

CHECKED BY: SEE JCAERO/ECN/2099

TITLE: INTERIOR PLACARDS ILLUSTRATED CATALOGUE

DRAWING NUMBER: HES113JCAERO2099

SHEET 56 OF 98

REV. C

© J&C AERO EEU LTD. OWN THE COPYRIGHT OF THIS DRAWING AND IT SHALL NOT BE REPRODUCED BY ANY OTHER WITHOUT THE PRIOR WRITTEN PERMISSION

DOC/302 ISSUE 1.0

(CONT.) 8.6 COCKPIT DOOR

ITEM NR.	OEM PART NUMBER (FOR REFERENCE ONLY)	ALTERNATIVE EPA PART NUMBER	DESCRIPTION	LAYOUT	SIZE (WXH); LETTERS HEIGHT	COLOR INDEX	MATERIAL COMBINATION	IPC/DWG REFERENCE	NOTE
45	D2527700840000 D2527700040000	JC320E026A01	CREW ONLY		75X75	4.1 4.3 4.4 4.8	E	11-42-25	
46	F2527706140000 D2527701940500	JC320E026A02	CREW ONLY	CREW ONLY EPA JC320E026A02	62X17 6	4.3 4.7	E	11-42-25	
47	D2527716320200	JC320E026A03	CAUTION: USE DEADBOLT IN ACCORDANCE TO MEL ONLY.	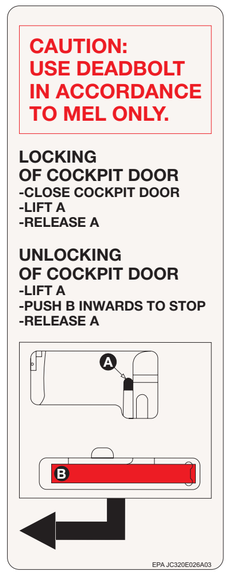	90X235 4; 5; 6	4.1 4.3 4.7 4.8	E	11-42-25	
48	D2527716320100	JC320E026A05	IN EMERGENCY PULL THE RINGS AND PUSH TO OPEN THE HATCH	IN EMERGENCY PULL THE RINGS AND PUSH TO OPEN THE HATCH EPA JC320E026A05	147x28 6	4.7 4.8	E	11-42-25	

© J&C AERO EEU LTD. OWN THE COPYRIGHT OF THIS DRAWING AND IT SHALL NOT BE REPRODUCED BY ANY OTHER WITHOUT THE PRIOR WRITTEN PERMISSION

DRAWING NUMBER: HES113JCAERO2099

8.7 SEAT MARKINGS

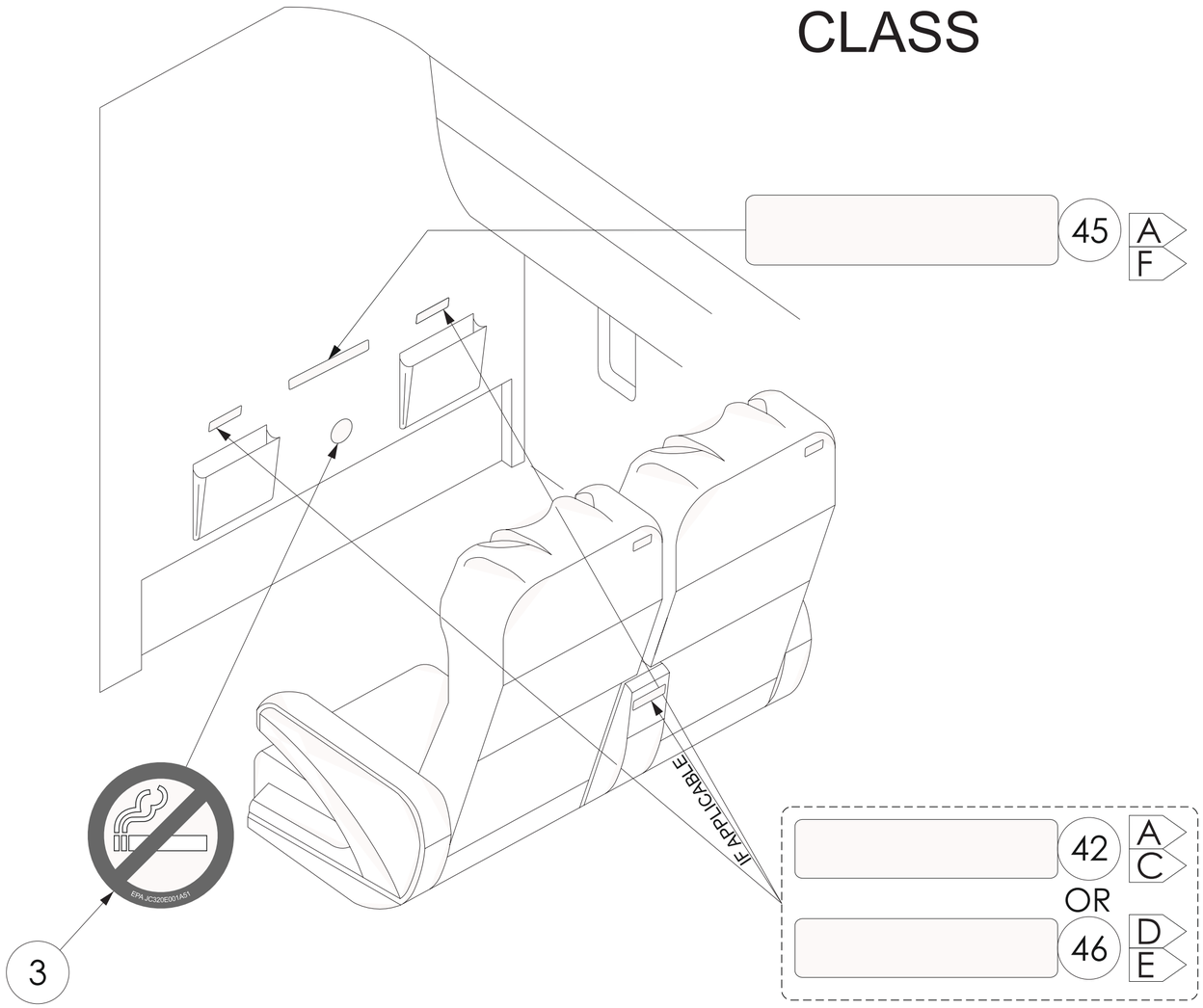

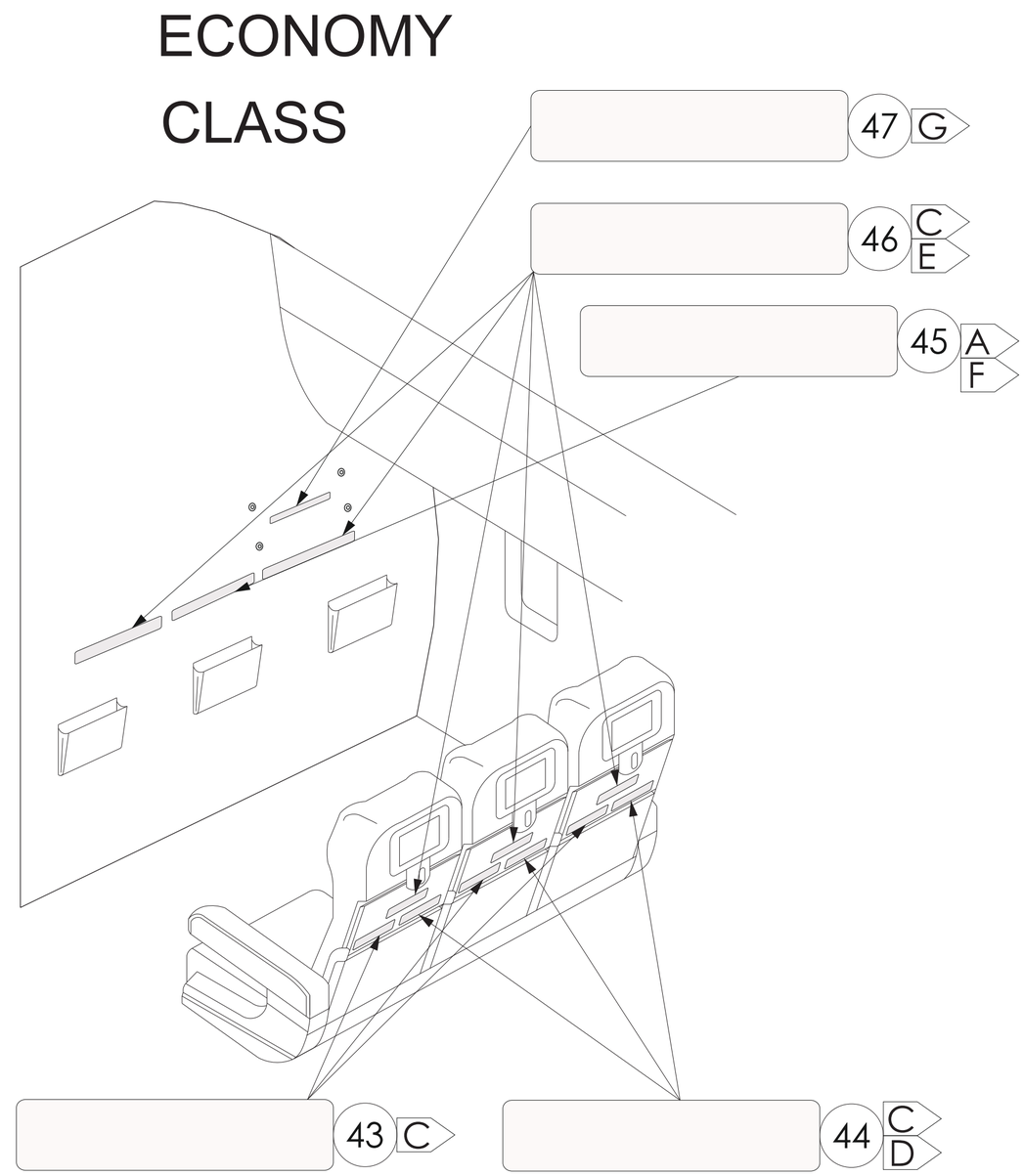

DWG SH NOTES:

- A - Installed only with relevant equipment.
- B - Refer to current AIPC or CMM or TC Holder drawings or approved modification for applicable placards and location.
- C - AC operator determines the placard background color.
- D - Only applicable for seats equipped with central armrest life vest stowage box placard.
- E - Only applicable for seats equipped with under armrest life vest stowage box placard.
- F - Applicable only for seat equipped with plug-in tables.
- G - Applicable only with pins for baby bassinet provision.

J&C AERO EEU
EASA APPROVAL NO: EASA.21J.580

WWW.THISISDOA.EU
INFO@THISISDOA.EU
PHONE: +353 15 269768

AIRCRAFT: SEE TABLE 1

TOLERANCES: OVERALL PLACARD DIMENSIONS ±1MM; RADIUS ±1MM; LETTERING/GRAPHIC DIMENSIONS +1.0/-0.5 MM; INSTALLATION ±4MM; ANGULAR ±5°.

DRAWN BY: SEE JCAERO/ECN/2099

MSN: SEE TABLE 1

REGISTRATION: -

SCALE: NTS | SIZE: A2 | ALL DIMENSIONS ARE MILLIMETERS | THIRD ANGLE PROJECTION

CHECKED BY: SEE JCAERO/ECN/2099

TITLE: INTERIOR PLACARDS ILLUSTRATED CATALOGUE

DRAWING NUMBER: HES113JCAERO2099

REV. C

© J&C AERO EEU LTD. OWN THE COPYRIGHT OF THIS DRAWING AND IT SHALL NOT BE REPRODUCED BY ANY OTHER WITHOUT THE PRIOR WRITTEN PERMISSION

DOC/302 ISSUE 1.0

(CONT.) 8.7 SEAT MARKINGS

ITEM NR.	OEM PART NUMBER (FOR REFERENCE ONLY)	ALTERNATIVE EPA PART NUMBER	DESCRIPTION	LAYOUT	SIZE (WXH); LETTERS HEIGHT	COLOR INDEX	MATERIAL COMBINATION	IPC/DWG REFERENCE	NOTE
49	C D	JC320E015A01	LIFE VEST UNDER CENTRAL ARMREST; FASTEN SEAT BELT	LIFE VEST UNDER CENTRAL ARMREST PLEASE FASTEN SEAT BELT WHILE SEATED EPA JC320E015A01	170X28 6	4.1 4.3 4.7	E	11-42-25	
		JC320E015A02	LIFE VEST UNDER CENTRAL ARMREST; FASTEN SEAT BELT	LIFE VEST UNDER CENTRAL ARMREST PLEASE FASTEN SEAT BELT WHILE SEATED EPA JC320E015A02	170X28 6	4.1 4.6 4.8	E	11-42-25	
		JC320E015A03	LIFE VEST UNDER CENTRAL ARMREST; FASTEN SEAT BELT	LIFE VEST UNDER CENTRAL ARMREST PLEASE FASTEN SEAT BELT WHILE SEATED EPA JC320E015A03	170X28 6	4.1 4.7 4.8	E	11-42-25	
		JC320E015A04	LIFE VEST UNDER CENTRAL ARMREST; FASTEN SEAT BELT	LIFE VEST UNDER CENTRAL ARMREST PLEASE FASTEN SEAT BELT WHILE SEATED EPA JC320E015A04	170X28 6	4.1 4.8 4.12	E	11-42-25	
50	C	JC320E015A20	FASTEN SEAT BELT	Please fasten seat belt while seated EPA JC320E015A20	125x20 4,8	4.3 4.7	E	11-42-25	FOR RECARO SERIES SEATS
		JC320E015A21	FASTEN SEAT BELT	Please fasten seat belt while seated EPA JC320E015A21	125x20 4,8	4.6 4.8	E	11-42-25	
		JC320E015A22	FASTEN SEAT BELT	Please fasten seat belt while seated EPA JC320E015A22	125x20 4,8	4.7 4.8	E	11-42-25	
		JC320E015A23	FASTEN SEAT BELT	Please fasten seat belt while seated EPA JC320E015A23	125x20 4,8	4.8 4.12	E	11-42-25	
		JC320E015A24	FASTEN SEAT BELT	Please fasten seat belt while seated EPA JC320E015A24	120x20 4,8	4.3 4.7	E	11-42-25	FOR BE AEROSPACE SPECTRUM SERIES SEATS
		JC320E015A25	FASTEN SEAT BELT	Please fasten seat belt while seated EPA JC320E015A25	120x20 4,8	4.6 4.8	E	11-42-25	
		JC320E015A26	FASTEN SEAT BELT	Please fasten seat belt while seated EPA JC320E015A26	120x20 4,8	4.7 4.8	E	11-42-25	
		JC320E015A27	FASTEN SEAT BELT	Please fasten seat belt while seated EPA JC320E015A27	120x20 4,8	4.8 4.12	E	11-42-25	

DWG SH NOTES:
- C - AC operator determines the placard background color.
- D - Only applicable for seats equipped with central armrest life vest stowage box placard.

© J&C AERO EEU LTD. OWN THE COPYRIGHT OF THIS DRAWING AND IT SHALL NOT BE REPRODUCED BY ANY OTHER WITHOUT THE PRIOR WRITTEN PERMISSION

(CONT.) 8.7 SEAT MARKINGS

ITEM NR.	OEM PART NUMBER (FOR REFERENCE ONLY)	ALTERNATIVE EPA PART NUMBER	DESCRIPTION	LAYOUT	SIZE (WXH); LETTERS HEIGHT	COLOR INDEX	MATERIAL COMBINATION	IPC/DWG REFERENCE	NOTE
51	C D	JC320E015A40	LIFE VEST UNDER YOUR SEAT	Life vest under your seat EPA JC320E015A40	125x20 4,8	4.3 4.7	E	11-32-25	FOR RECARO SERIES SEATS
		JC320E015A41	LIFE VEST UNDER YOUR SEAT	Life vest under your seat EPA JC320E015A41	125x20 4,8	4.6 4.8	E	11-32-25	
		JC320E015A42	LIFE VEST UNDER YOUR SEAT	Life vest under your seat EPA JC320E015A42	125x20 4,8	4.7 4.8	E	11-32-25	
		JC320E015A43	LIFE VEST UNDER YOUR SEAT	Life vest under your seat EPA JC320E015A43	125x20 4,8	4.8 4.12	E	11-32-25	
		JC320E015A45	LIFE VEST UNDER YOUR SEAT	Life vest under your seat EPA JC320E015A45	120x20 4,8	4.6 4.8	E	11-32-25	FOR BE AEROSPACE SPECTRUM SERIES SEATS
		JC320E015A46	LIFE VEST UNDER YOUR SEAT	Life vest under your seat EPA JC320E015A46	120x20 4,8	4.7 4.8	E	11-32-25	
		JC320E015A47	LIFE VEST UNDER YOUR SEAT	Life vest under your seat EPA JC320E015A47	120x20 4,8	4.8 4.12	E	11-32-25	
52	F2527709641600	JC320E015A60	BABY BASSINET MUST BE STORED	BABY BASSINET MUST BE STORED DURING TAKE-OFF, LANDING AND TURBULENT WEATHER EPA JC320E015A60	210X27 6	4.3 4.7	E	11-42-25	INSTALL ONLY WITH RELEVANT EQUIPMENT
	D2527700942000	JC320E015A61	TABLE MUST BE STOWED	TABLE MUST BE STOWED DURING TAKE-OFF AND LANDING EPA JC320E015A61	147X25 6	4.3 4.7	E	11-42-25	INSTALL ONLY WITH RELEVANT EQUIPMENT
	F	JC320E015A62	PLUG-IN TABLE MUST BE STOWED	PLUG-IN TABLE MUST BE STOWED DURING TAKE-OFF AND LANDING EPA JC320E015A62	155X26 6	4.3 4.7	E	N/A	INSTALL ONLY WITH RELEVANT EQUIPMENT

DWG SH NOTES:
- C - AC operator determines the placard background color.
- D - Only applicable for seat equipped with central armrest life vest stowage box placard.
- F - Applicable only for seat equipped with plug-in tables.

© J&C AERO EEU LTD. OWN THE COPYRIGHT OF THIS DRAWING AND IT SHALL NOT BE REPRODUCED BY ANY OTHER WITHOUT THE PRIOR WRITTEN PERMISSION

(CONT.) 8.7 SEAT MARKINGS

ITEM NR.	OEM PART NUMBER (FOR REFERENCE ONLY)	ALTERNATIVE EPA PART NUMBER	DESCRIPTION	LAYOUT	SIZE (WXH); LETTERS HEIGHT	COLOR INDEX	MATERIAL COMBINATION	IPC/DWG REFERENCE	NOTE
53	D2527700841200	JC320E015A80	LIFE VEST UNDER YOUR SEAT; FASTEN SEAT BELT	LIFE VEST UNDER YOUR SEAT PLEASE FASTEN SEAT BELT WHILE SEATED EPA JC320E015A80	170X28 6	4.1 4.3 4.7	E	11-52-25	
	E C	JC320E015A81	LIFE VEST UNDER YOUR SEAT; FASTEN SEAT BELT	Life vest under your seat Please fasten seat belt while seated EPA JC320E015A81	125x26 4,8	4.3 4.7	E	11-52-25	
		JC320E015A82	LIFE VEST UNDER YOUR SEAT; FASTEN SEAT BELT	Life vest under your seat Please fasten seat belt while seated EPA JC320E015A82	125x26 4,8	4.6 4.8	E	11-52-25	
		JC320E015A83	LIFE VEST UNDER YOUR SEAT; FASTEN SEAT BELT	Life vest under your seat Please fasten seat belt while seated EPA JC320E015A83	125x26 4,8	4.7 4.8	E	11-52-25	
		JC320E015A84	LIFE VEST UNDER YOUR SEAT; FASTEN SEAT BELT	Life vest under your seat Please fasten seat belt while seated EPA JC320E015A84	125x26 4,8	4.8 4.12	E	11-52-25	
54	G	JC320E015A85	2-PIN BABY	2-pin baby bassinet must be installed in upper position EPA JC320E015A85	230x16	4.3 4.7	E	11-52-25	
55	G25277080420	JC320E001A51	NO SMOKING	EPA JC320E001A51	45X45	4.1 4.3 4.7 4.16	E	11-32-25	

DWG SH NOTES:
- C - AC operator determines the placard background color.
- E - Only applicable for seats equipped with under armrest life vest stowage box placard.
- G - Applicable only with pins for baby bassinet provision.

© J&C AERO EEU LTD. OWN THE COPYRIGHT OF THIS DRAWING AND IT SHALL NOT BE REPRODUCED BY ANY OTHER WITHOUT THE PRIOR WRITTEN PERMISSION

DRAWING NUMBER: HES113JCAERO2099

8.8 FLAP/SLAT VISUAL INSPECTION WINDOW MARKING

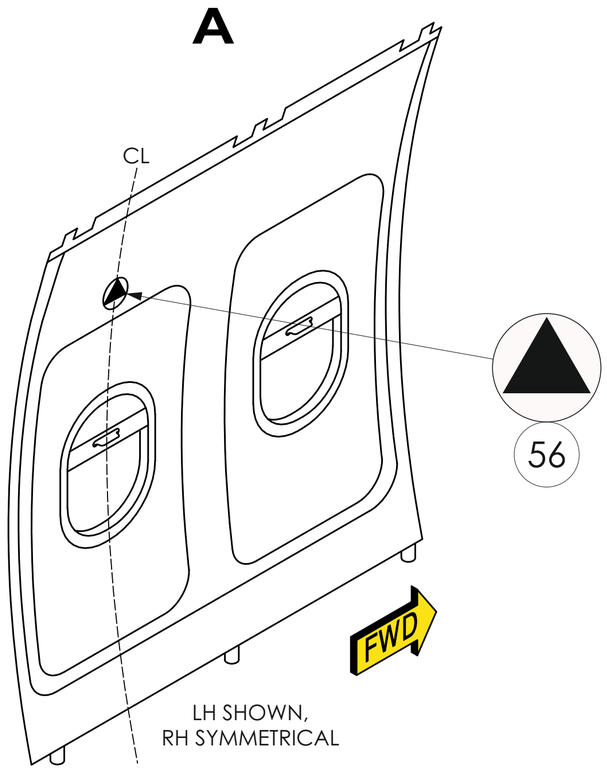

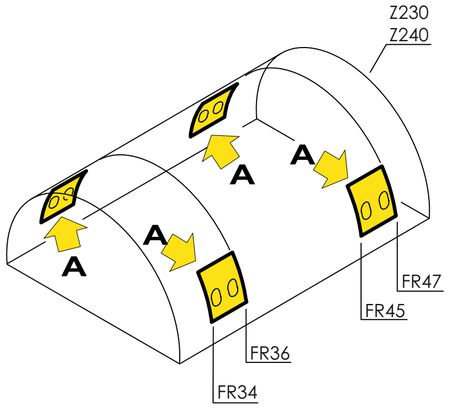

DWG SH NOTES: A - Refer to current AIPC or CMM or TC Holder drawings or approved modification for applicable placards and location.

J&C AERO EEU
EASA APPROVAL NO: EASA.21J.580

WWW.THISISDOA.EU
INFO@THISISDOA.EU
PHONE: +353 15 269768

AIRCRAFT: SEE TABLE 1

TOLERANCES: OVERALL PLACARD DIMENSIONS ±1MM; RADIUS ±1MM; LETTERING/GRAPHIC DIMENSIONS +1.0/-0.5 MM; INSTALLATION ±4MM; ANGULAR ±5°.

DRAWN BY: SEE JCAERO/ECN/2099

MSN: SEE TABLE 1

REGISTRATION: -

SCALE: NTS

SIZE: A2

ALL DIMENSIONS ARE MILLIMETERS
THIRD ANGLE PROJECTION

CHECKED BY: SEE JCAERO/ECN/2099

TITLE: INTERIOR PLACARDS ILLUSTRATED CATALOGUE

DRAWING NUMBER: HES113JCAERO2099

SHEET 62 OF 98

REV. C

© J&C AERO EEU LTD. OWN THE COPYRIGHT OF THIS DRAWING AND IT SHALL NOT BE REPRODUCED BY ANY OTHER WITHOUT THE PRIOR WRITTEN PERMISSION

DOC/302
ISSUE 1.0

(CONT.) 8.8 FLAP/SLAT VISUAL INSPECTION WINDOW MARKING

ITEM NR.	OEM PART NUMBER (FOR REFERENCE ONLY)	ALTERNATIVE EPA PART NUMBER	DESCRIPTION	LAYOUT	SIZE (WXH); LETTERS HEIGHT	COLOR INDEX	MATERIAL COMBINATION	IPC/DWG REFERENCE	NOTE
56	D2527720048000	JC320E300A01	TRIANGLE		Ø25 TRIANGLE 20	4.3 4.7	E	11-32-25	

© J&C AERO EEU LTD. OWN THE COPYRIGHT OF THIS DRAWING AND IT SHALL NOT BE REPRODUCED BY ANY OTHER WITHOUT THE PRIOR WRITTEN PERMISSION

DRAWING NUMBER: HES113JCAERO2099

9. TYPICAL EMERGENCY EQUIPMENT PLACARD INSTALLATION LAYOUT AND LIST OF ITEMS NUMERIC INDEX

TABLE OF CONTENT: SHEET

9.1 TYPICAL EMERGENCY EQUIPMENT PLACARD INSTALLATION ON FLIGHT ATTENDANT SEATS	65-66
9.2 EMERGENCY EQUIPMENT PLACARD INSTALLATION IN OVERHEAD STORAGE COMPARTMENT	67
9.3 CABIN DIVIDER AND DOGHOUSE	68
9.4 TYPICAL EMERGENCY EQUIPMENT PLACARD INSTALLATION IN FRONT PARTITION	69-71
9.5 CEILING COMPARTMENT BETWEEN AFT LAVATORIES	72
9.6 EMERGENCY EQUIPMENT MARKINGS LIST OF NUMERIC INDEX	73-80
9.7 TYPICAL EMERGENCY EQUIPMENT PLACARD INSTALLATION LAYOUT IN COCKPIT AND ON COCKPIT SEATS	81-83

J&C AERO EEU
EASA APPROVAL NO: EASA.21J.580

WWW.THISISDOA.EU
INFO@THISISDOA.EU
PHONE: +353 15 269768

AIRCRAFT: SEE TABLE 1

TOLERANCES: OVERALL PLACARD DIMENSIONS ±1MM; RADIUS ±1MM; LETTERING/GRAPHIC DIMENSIONS +1.0/-0.5 MM; INSTALLATION ±4MM; ANGULAR ±5°.

DRAWN BY: SEE JCAERO/ECN/2099

MSN: SEE TABLE 1

REGISTRATION: -

SCALE: NTS | SIZE: A2 | ALL DIMENSIONS ARE MILLIMETERS | THIRD ANGLE PROJECTION

CHECKED BY: SEE JCAERO/ECN/2099

TITLE: INTERIOR PLACARDS ILLUSTRATED CATALOGUE

DRAWING NUMBER: HES113JCAERO2099

REV. C

© J&C AERO EEU LTD. OWN THE COPYRIGHT OF THIS DRAWING AND IT SHALL NOT BE REPRODUCED BY ANY OTHER WITHOUT THE PRIOR WRITTEN PERMISSION

DOC/302 ISSUE 1.0

9.1 TYPICAL EMERGENCY EQUIPMENT PLACARD INSTALLATION ON FLIGHT ATTENDANT SEATS

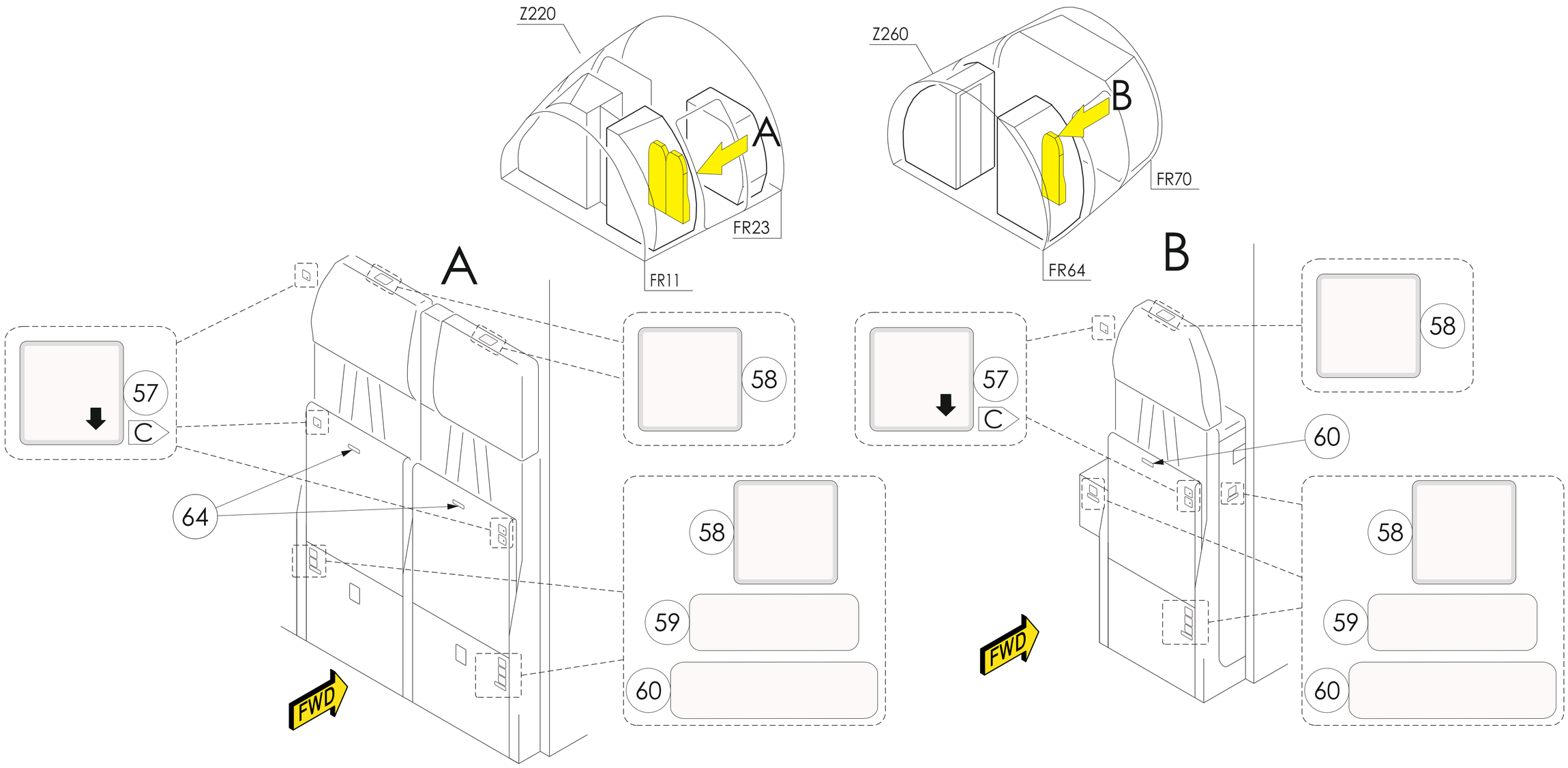

DWG SH NOTES:

A - Before placard installation inspect installed emergency equipment in specified location, to ensure that markings will show all equipment installed.

B - Install placards in accordance with latest approved emergency equipment layout (EEL).

C - Placard with arrow shows which equipment is stored below.

D - Refer to current AIPC or CMM or TC Holder drawings or approved modification for applicable placards and location.

J&C AERO EEU
EASA APPROVAL NO: EASA.21J.580

WWW.THISISDOA.EU
INFO@THISISDOA.EU
PHONE: +353 15 269768

AIRCRAFT: SEE TABLE 1	TOLERANCES: OVERALL PLACARD DIMENSIONS ±1MM; RADIUS ±1MM; LETTERING/GRAPHIC DIMENSIONS +1.0/-0.5 MM; INSTALLATION ±4MM; ANGULAR ±5°.				DRAWN BY: SEE JCAERO/ECN/2099
MSN: SEE TABLE 1	REGISTRATION: -	SCALE: NTS	SIZE: A2	ALL DIMENSIONS ARE MILLIMETERS THIRD ANGLE PROJECTION	CHECKED BY: SEE JCAERO/ECN/2099
TITLE: INTERIOR PLACARDS ILLUSTRATED CATALOGUE					
DRAWING NUMBER: HES113JCAERO2099				SHEET 65 OF 98	REV. C

© J&C AERO EEU LTD. OWN THE COPYRIGHT OF THIS DRAWING AND IT SHALL NOT BE REPRODUCED BY ANY OTHER WITHOUT THE PRIOR WRITTEN PERMISSION

(CONT.) 9.1 TYPICAL EMERGENCY EQUIPMENT PLACARD INSTALLATION ON FLIGHT ATTENDANT SEATS

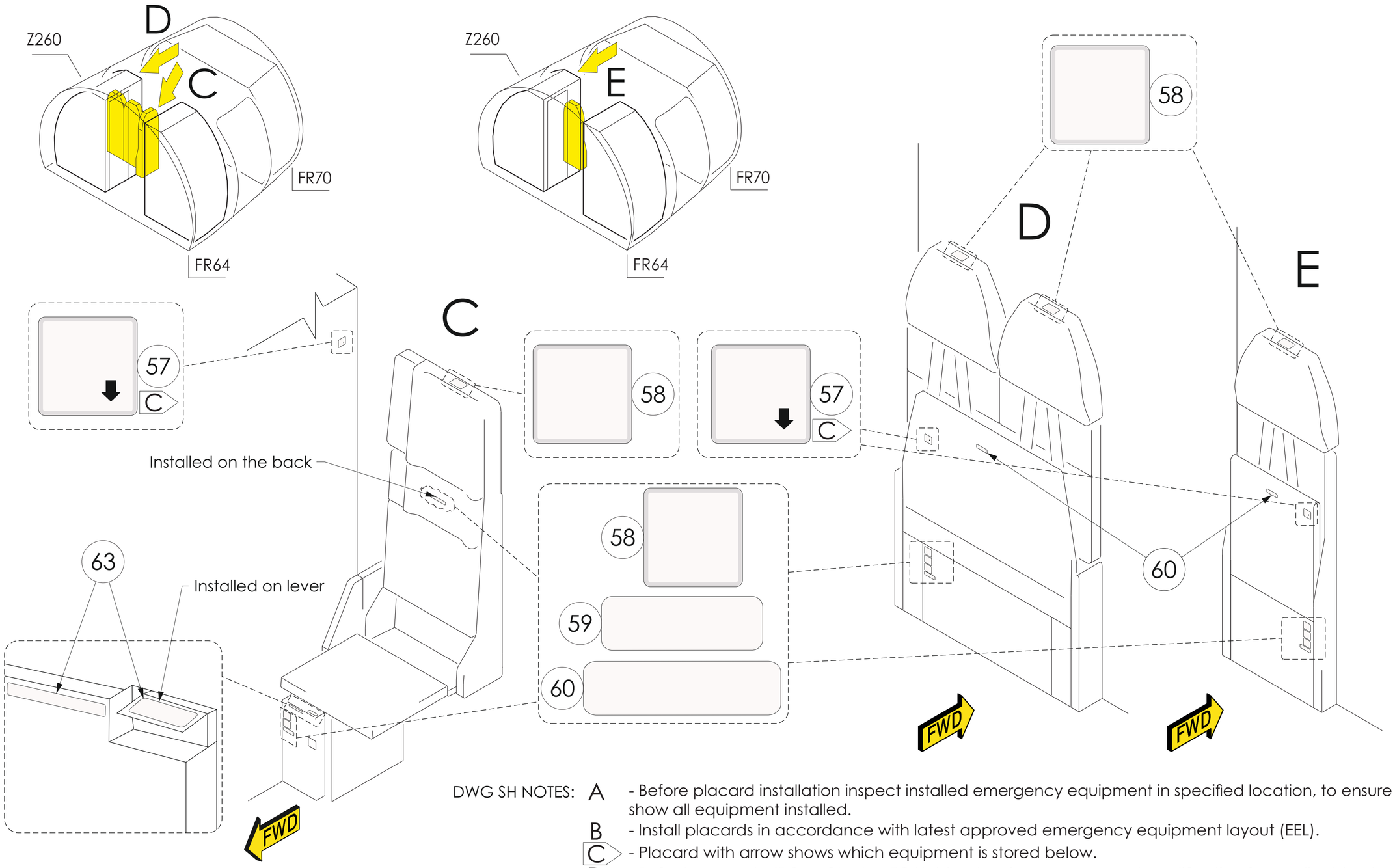

DWG SH NOTES:

A - Before placard installation inspect installed emergency equipment in specified location, to ensure that markings will show all equipment installed.

B - Install placards in accordance with latest approved emergency equipment layout (EEL).

C - Placard with arrow shows which equipment is stored below.

D - Refer to current AIPC or CMM or TC Holder drawings or approved modification for applicable placards and location.

J&C AERO EEU EASA APPROVAL NO: EASA.21J.580	WWW.THISISDOA.EU INFO@THISISDOA.EU PHONE: +353 15 269768	AIRCRAFT: SEE TABLE 1	TOLERANCES OVERALL PLACARD DIMENSIONS ±1MM; RADIUS ±1MM; LETTERING/GRAPHIC DIMENSIONS +1.0/-0.5 MM; INSTALLATION ±4MM; ANGULAR ±5°.	DRAWN BY: SEE JCAERO/ECN/2099
	MSN: SEE TABLE 1	REGISTRATION: -	SCALE: NTS / SIZE: A2 / ALL DIMENSIONS ARE MILLIMETERS / THIRD ANGLE PROJECTION	CHECKED BY: SEE JCAERO/ECN/2099
	TITLE: INTERIOR PLACARDS ILLUSTRATED CATALOGUE			
	DRAWING NUMBER: HES113JCAERO2099		SHEET 66 OF 98	REV. C

© J&C AERO EEU LTD. OWN THE COPYRIGHT OF THIS DRAWING AND IT SHALL NOT BE REPRODUCED BY ANY OTHER WITHOUT THE PRIOR WRITTEN PERMISSION

DRAWING NUMBER: HES113JCAERO2099

9.2 EMERGENCY EQUIPMENT PLACARD INSTALLATION IN OVERHEAD STORAGE COMPARTMENT

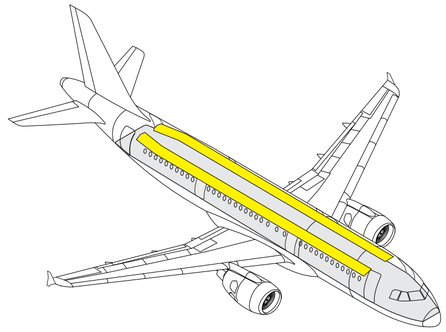

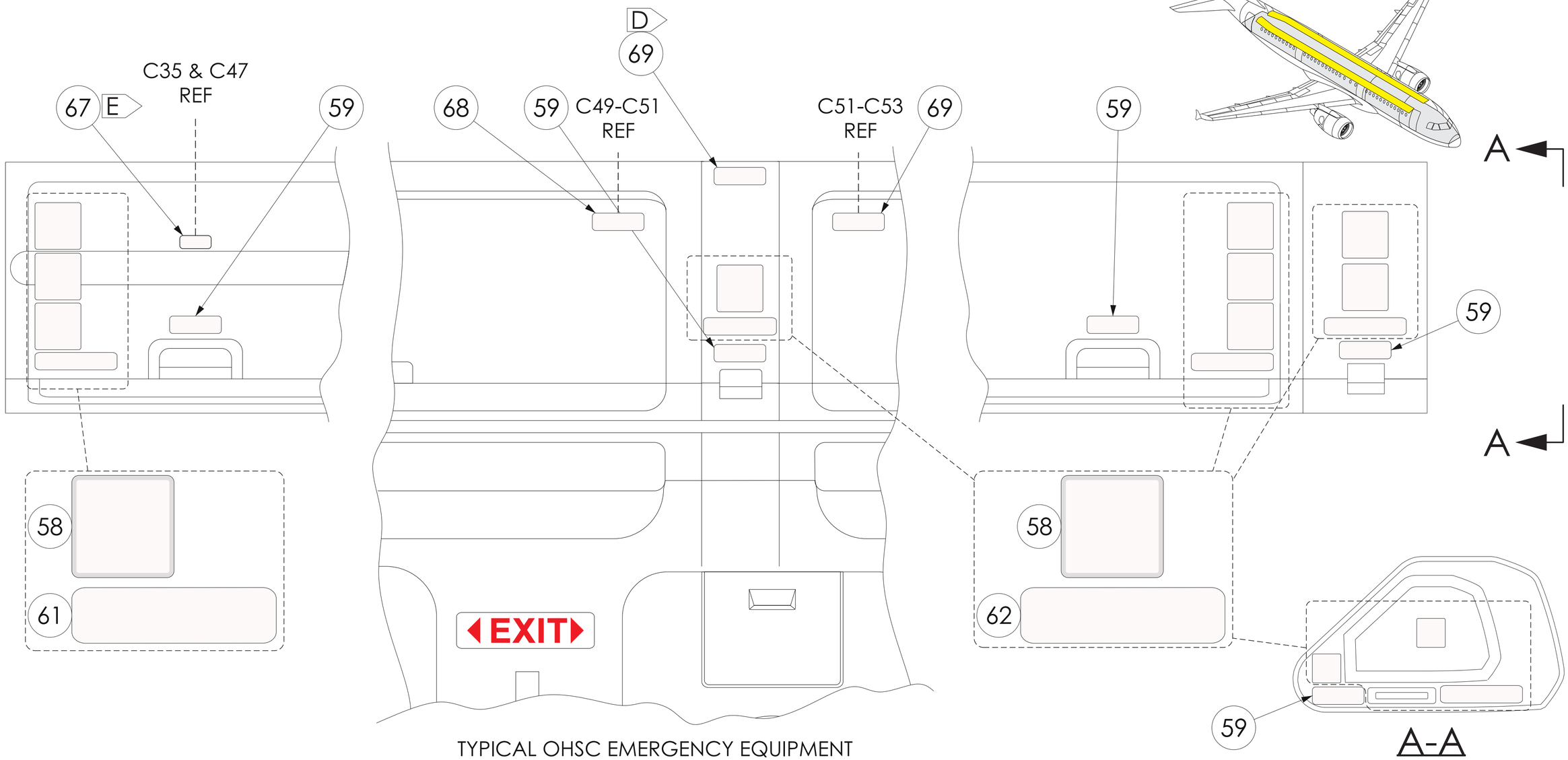

TYPICAL OHSC EMERGENCY EQUIPMENT
PLACARD INSTALLATION SHOWN

DWG SH NOTES:

- A - Before placard installation inspect installed emergency equipment in specified location, to ensure that markings will show all equipment installed.
- B - Install placards in accordance with latest approved emergency equipment layout (EEL).
- C - Refer to current AIPC or CMM or TC Holder drawings or approved modification for applicable placards and location.
- D - Install placards if Life Line is installed IAW emergency equipment layout (EEL).
- E - Install placard inside hatrack.

J&C AERO EEU EASA APPROVAL NO: EASA.21J.580	WWW.THISISDOA.EU INFO@THISISDOA.EU PHONE: +353 15 269768	AIRCRAFT: SEE TABLE 1	TOLERANCES OVERALL PLACARD DIMENSIONS ±1MM; RADIUS ±1MM; LETTERING/GRAPHIC DIMENSIONS +1.0/-0.5 MM; INSTALLATION ±4MM; ANGULAR ±5°.	DRAWN BY: SEE JCAERO/ECN/2099
	MSN: SEE TABLE 1	REGISTRATION: -	SCALE: NTS / SIZE: A2 / ALL DIMENSIONS ARE MILLIMETERS / THIRD ANGLE PROJECTION	CHECKED BY: SEE JCAERO/ECN/2099
	TITLE: INTERIOR PLACARDS ILLUSTRATED CATALOGUE			
	DRAWING NUMBER: HES113JCAERO2099		SHEET 67 OF 98	REV. C

© J&C AERO EEU LTD. OWN THE COPYRIGHT OF THIS DRAWING AND IT SHALL NOT BE REPRODUCED BY ANY OTHER WITHOUT THE PRIOR WRITTEN PERMISSION

DRAWING NUMBER: HES113JCAERO2099

9.3 CABIN DIVIDER AND DOGHOUSE

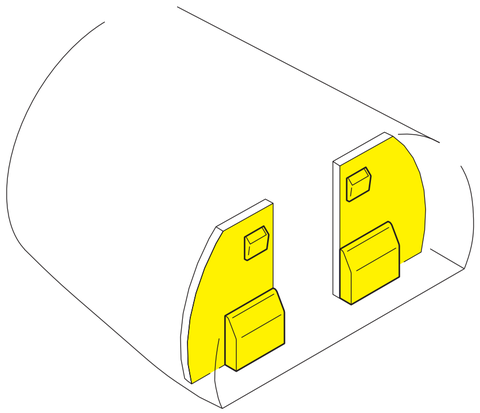

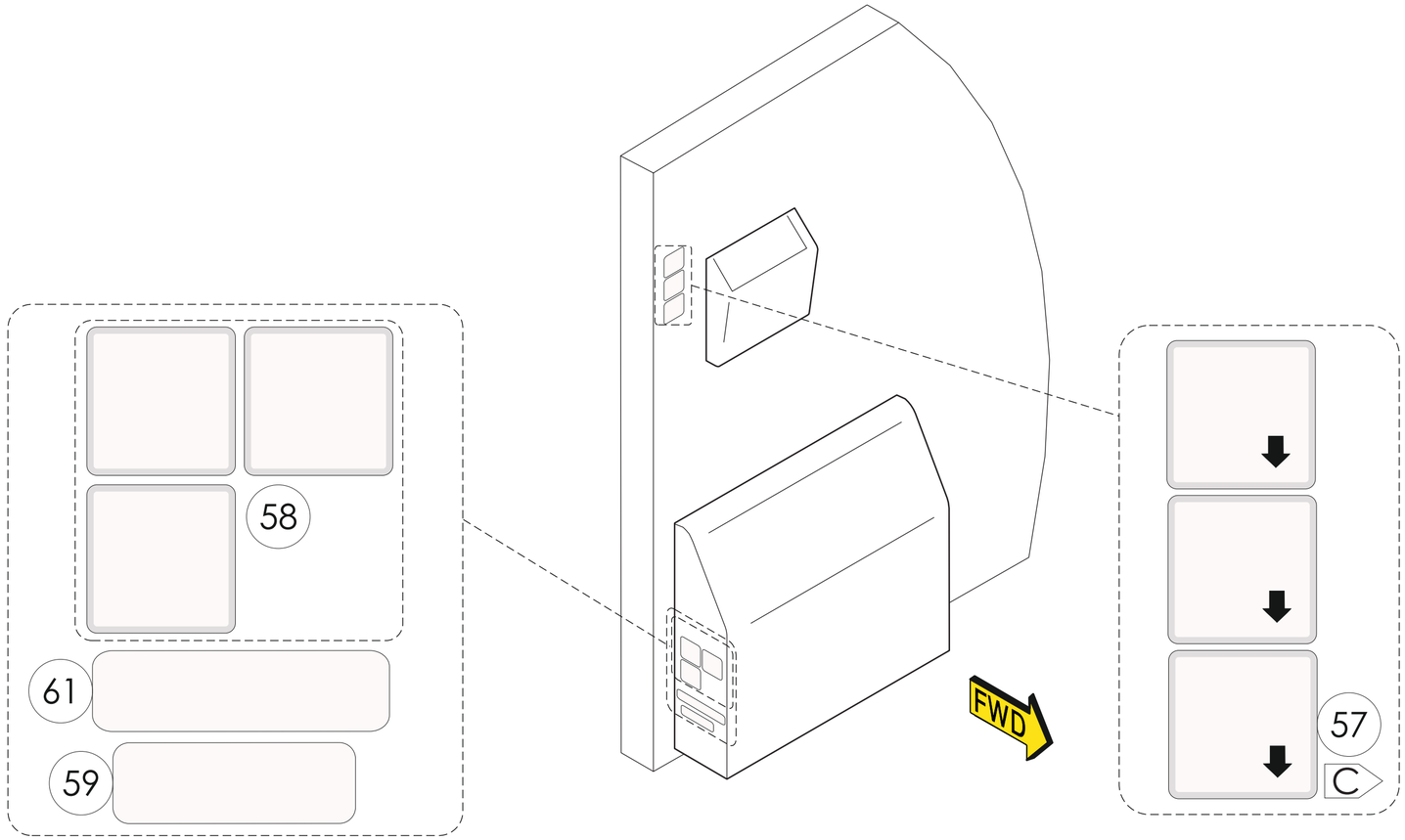

DWG SH NOTES:

A - Before placard installation inspect installed emergency equipment in specified location, to ensure that markings will show all equipment installed.

B - Install placards in accordance with latest approved emergency equipment layout (EEL).

C - Placard with arrow shows which equipment is stored below.

D - Refer to current AIPC or CMM or TC Holder drawings or approved modification for applicable placards and location.

J&C AERO EEU
EASA APPROVAL NO: EASA.21J.580

WWW.THISISDOA.EU
INFO@THISISDOA.EU
PHONE: +353 15 269768

AIRCRAFT: SEE TABLE 1	TOLERANCES: OVERALL PLACARD DIMENSIONS ±1MM; RADIUS ±1MM; LETTERING/GRAPHIC DIMENSIONS +1.0/-0.5 MM; INSTALLATION ±4MM; ANGULAR ±5°.		DRAWN BY: SEE JCAERO/ECN/2099
MSN: SEE TABLE 1	REGISTRATION: -	SCALE: NTS / SIZE: A2 / ALL DIMENSIONS ARE MILLIMETERS / THIRD ANGLE PROJECTION	CHECKED BY: SEE JCAERO/ECN/2099
TITLE: INTERIOR PLACARDS ILLUSTRATED CATALOGUE			
DRAWING NUMBER: HES113JCAERO2099		SHEET 68 OF 98	REV. C

© J&C AERO EEU LTD. OWN THE COPYRIGHT OF THIS DRAWING AND IT SHALL NOT BE REPRODUCED BY ANY OTHER WITHOUT THE PRIOR WRITTEN PERMISSION

DOC/302 ISSUE 1.0

DRAWING NUMBER: HES113JCAERO2099

9.4 TYPICAL EMERGENCY EQUIPMENT PLACARD INSTALLATION IN FRONT PARTITION

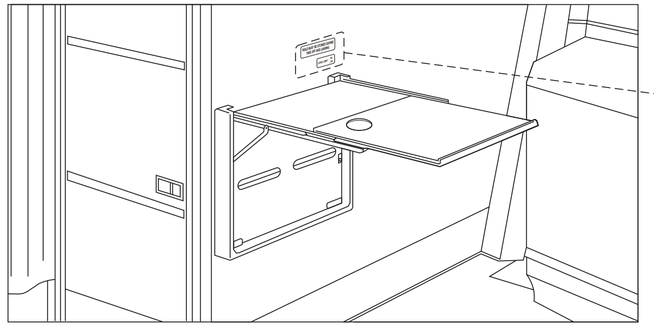

66 TABLE MUST BE STOWED DURING TAKE-OFF AND LANDING

65 LOAD LIMIT __kg __lbs

ATTENDANT FOLDING TABLE

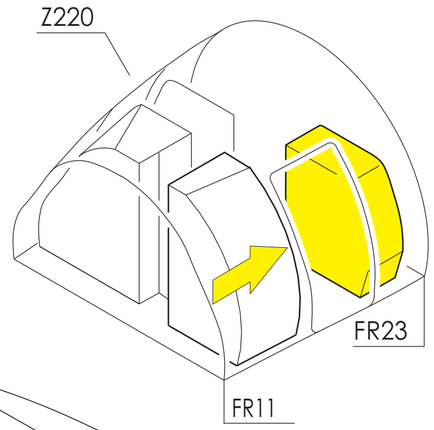

66 TABLE MUST BE STOWED FOR TAXI, TAKE OFF, LANDING AND TURBULENT WEATHER

65 LOAD LIMIT __kg __lbs

COT TABLE

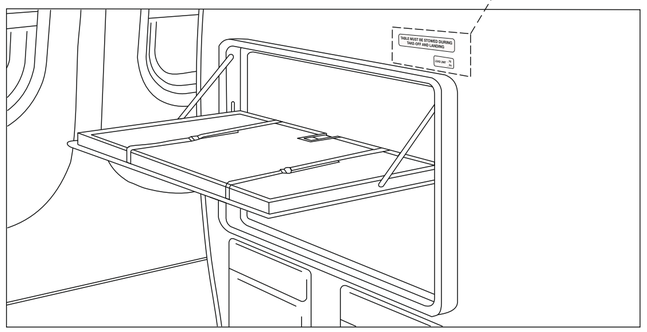

57 C

58

59

61

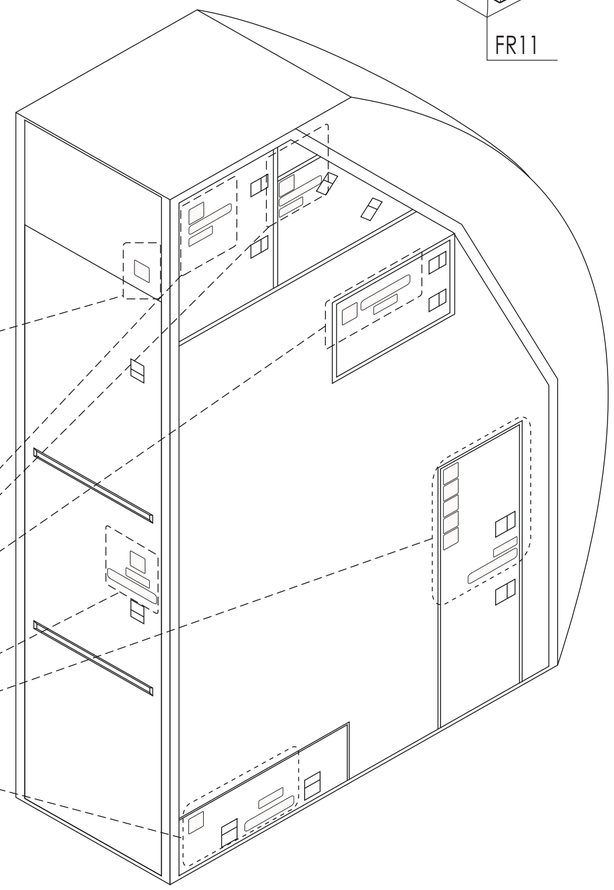

DWG SH NOTES:

A - Before placard installation inspect installed emergency equipment in specified location, to ensure that markings will show all equipment installed.

B - Install placards in accordance with latest approved emergency equipment layout (EEL).

C - Placard with arrow shows which equipment is stored below.

D - Refer to current AIPC or CMM or TC Holder drawings or approved modification for applicable placards and location.

J&C AERO EEU
EASA APPROVAL NO: EASA.21J.580

WWW.THISISDOA.EU
INFO@THISISDOA.EU
PHONE: +353 15 269768

AIRCRAFT: SEE TABLE 1

TOLERANCES: OVERALL PLACARD DIMENSIONS ±1MM; RADIUS ±1MM; LETTERING/GRAPHIC DIMENSIONS +1.0/-0.5 MM; INSTALLATION ±4MM; ANGULAR ±5°.

DRAWN BY: SEE JCAERO/ECN/2099

MSN: SEE TABLE 1

REGISTRATION: -

SCALE: NTS | SIZE: A2 | ALL DIMENSIONS ARE MILLIMETERS | THIRD ANGLE PROJECTION

CHECKED BY: SEE JCAERO/ECN/2099

TITLE: INTERIOR PLACARDS ILLUSTRATED CATALOGUE

DRAWING NUMBER: HES113JCAERO2099

SHEET 69 OF 98

REV. C

© J&C AERO EEU LTD. OWN THE COPYRIGHT OF THIS DRAWING AND IT SHALL NOT BE REPRODUCED BY ANY OTHER WITHOUT THE PRIOR WRITTEN PERMISSION

DOC/302 ISSUE 1.0

(CONT.) 9.4 TYPICAL EMERGENCY EQUIPMENT PLACARD INSTALLATION IN FRONT PARTITION

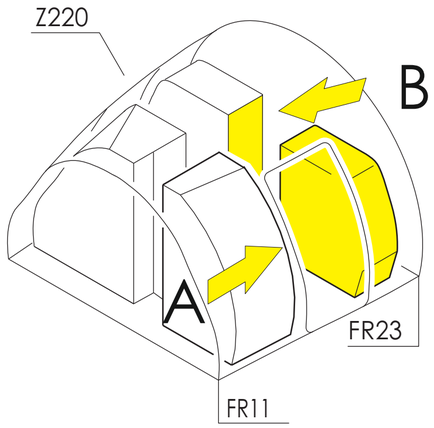

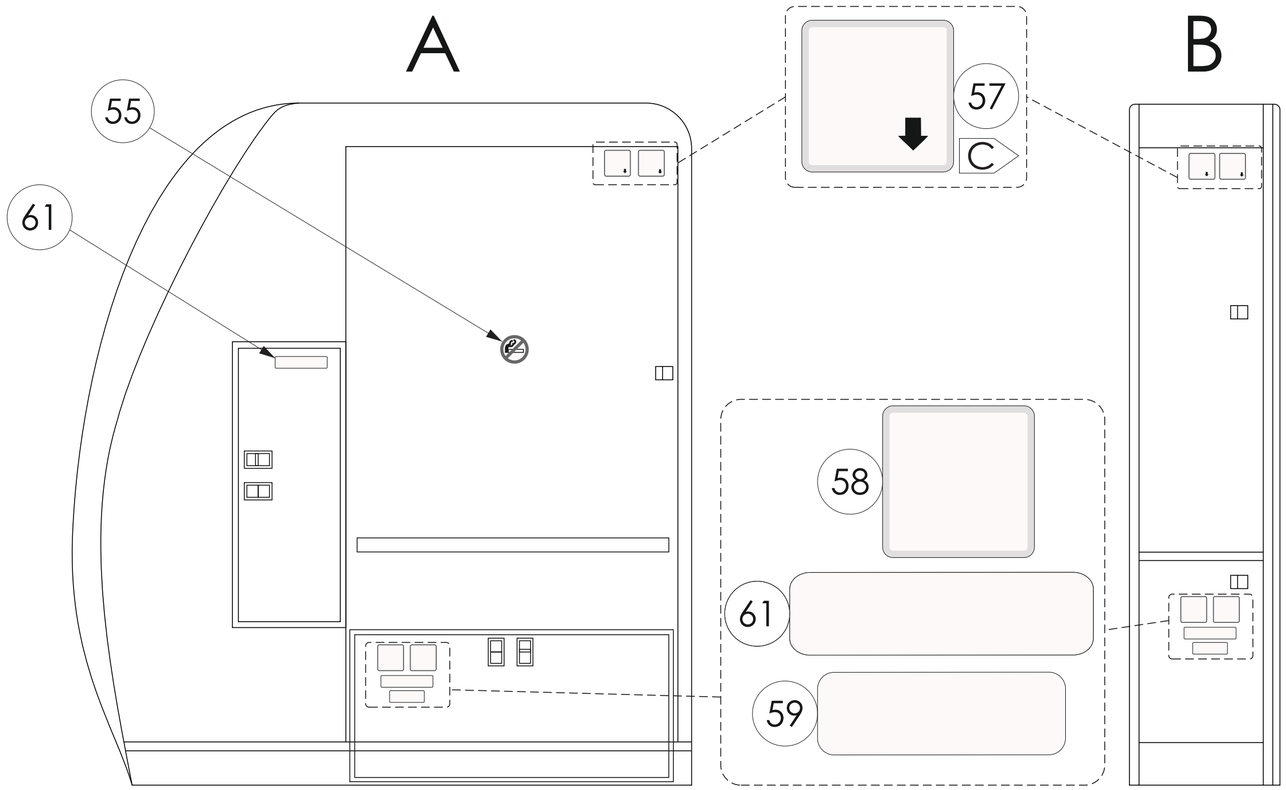

DWG SH NOTES:

A - Before placard installation inspect installed emergency equipment in specified location, to ensure that markings will show all equipment installed.

B - Install placards in accordance with latest approved emergency equipment layout (EEL).

C - Refer to current AIPC or CMM or TC Holder drawings or approved modification for applicable placards and location.

© J&C AERO EEU LTD. OWN THE COPYRIGHT OF THIS DRAWING AND IT SHALL NOT BE REPRODUCED BY ANY OTHER WITHOUT THE PRIOR WRITTEN PERMISSION

(CONT.) 9.4 TYPICAL EMERGENCY EQUIPMENT PLACARD INSTALLATION IN FRONT PARTITION

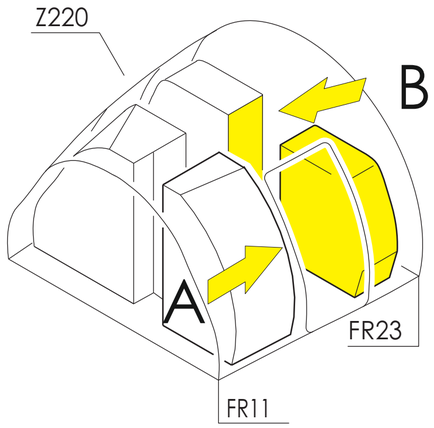

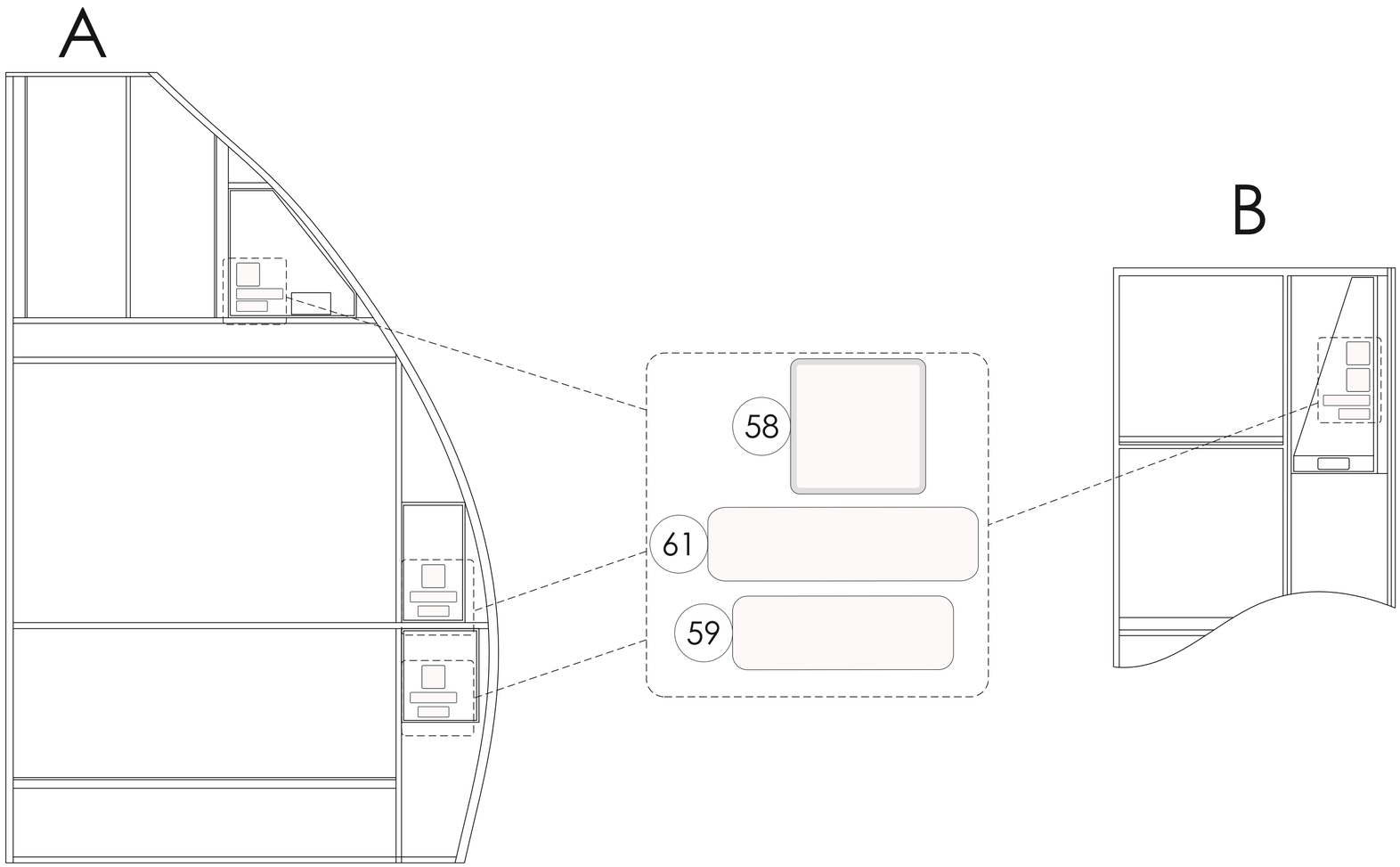

DWG SH NOTES:

A - Before placard installation inspect installed emergency equipment in specified location, to ensure that markings will show all equipment installed.

B - Install placards in accordance with latest approved emergency equipment layout (EEL).

C - Refer to current AIPC or CMM or TC Holder drawings or approved modification for applicable placards and location.

© J&C AERO EEU LTD. OWN THE COPYRIGHT OF THIS DRAWING AND IT SHALL NOT BE REPRODUCED BY ANY OTHER WITHOUT THE PRIOR WRITTEN PERMISSION

DRAWING NUMBER: HES113JCAERO2099

9.5 CEILING COMPARTMENT BETWEEN AFT LAVATORIES

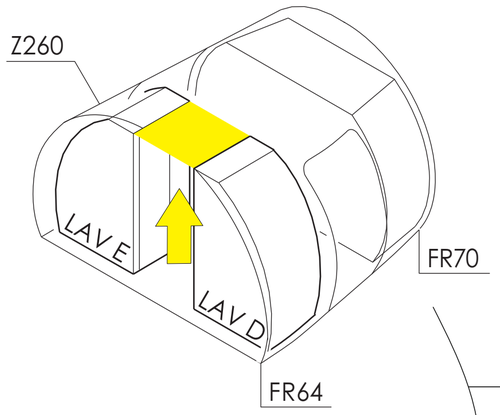

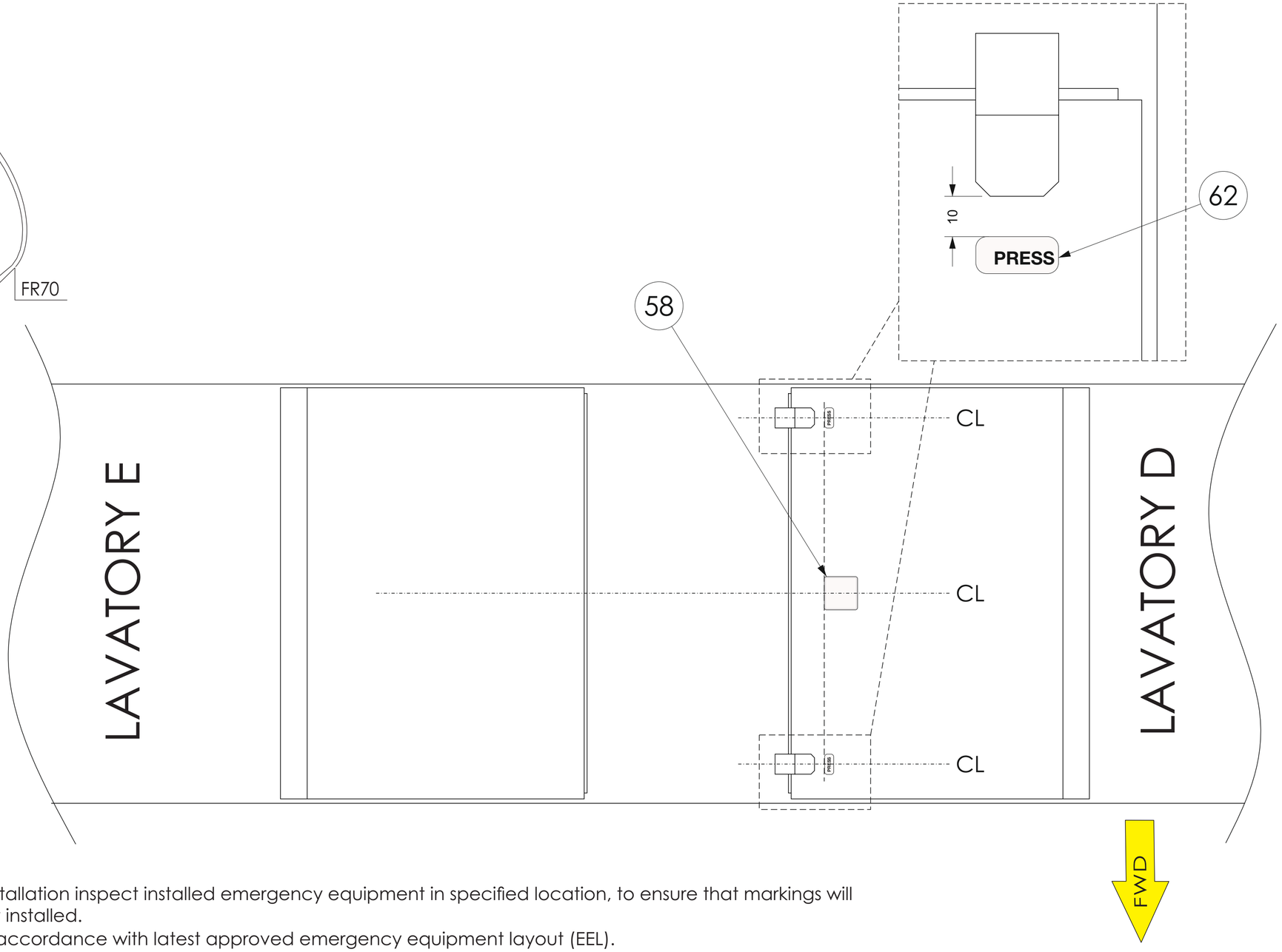

DWG SH NOTES:

A - Before placard installation inspect installed emergency equipment in specified location, to ensure that markings will show all equipment installed.

B - Install placards in accordance with latest approved emergency equipment layout (EEL).

C - Refer to current AIPC or CMM or TC Holder drawings or approved modification for applicable placards and location.

J&C AERO EEU
EASA APPROVAL NO: EASA.21J.580

WWW.THISISDOA.EU
INFO@THISISDOA.EU
PHONE: +353 15 269768

AIRCRAFT: SEE TABLE 1	TOLERANCES: OVERALL PLACARD DIMENSIONS ±1MM; RADIUS ±1MM; LETTERING/GRAPHIC DIMENSIONS +1.0/-0.5 MM; INSTALLATION ±4MM; ANGULAR ±5°.			DRAWN BY: SEE JCAERO/ECN/2099
MSN: SEE TABLE 1	REGISTRATION: -	SCALE: NTS	SIZE: A2	ALL DIMENSIONS ARE MILLIMETERS THIRD ANGLE PROJECTION	CHECKED BY: SEE JCAERO/ECN/2099
TITLE: INTERIOR PLACARDS ILLUSTRATED CATALOGUE				
DRAWING NUMBER: HES113JCAERO2099			SHEET 72 OF 98	REV. C

© J&C AERO EEU LTD. OWN THE COPYRIGHT OF THIS DRAWING AND IT SHALL NOT BE REPRODUCED BY ANY OTHER WITHOUT THE PRIOR WRITTEN PERMISSION

DOC/302 ISSUE 1.0

9.6 EMERGENCY EQUIPMENT MARKINGS LIST OF NUMERIC INDEX

ITEM NR.	OEM PART NUMBER (FOR REFERENCE ONLY)	ALTERNATIVE EPA PART NUMBER	DESCRIPTION	LAYOUT	SIZE (WXH); LETTERS HEIGHT	COLOR INDEX	MATERIAL COMBINATION	IPC/DWG REFERENCE	NOTE
57	D2527719933100	JC320E030A01	MEGAPHONE		44X44	4.1 4.3 4.4 4.16	E	11-42-25	
	D2527719931000 D2527700831000 D2527700031000	JC320E030A02	FIRE EXTINGUISHER		44X44	4.1 4.3 4.4 4.16	E	11-42-25	
	D2527701736100	JC320E030A03	PBE		44X44	4.1 4.3 4.4 4.16	E	11-42-25	
	D2527719930000 D2527700030000 D2527700031000	JC320E030A04	OXYGEN	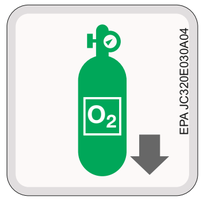	44X44 3; 4	4.2 4.3 4.4 4.8 4.16	E	11-42-25	
	A2528131934400	JC320E030A05	FIRST AID KIT	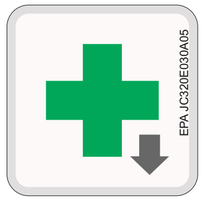	44X44	4.2 4.3 4.4 4.16	E	11-42-25	
	D2527708438800	JC320E030A06	FIRE FIGHTING GLOVES		44X44	4.1 4.3 4.4 4.16	E	11-42-25	

© J&C AERO EEU LTD. OWN THE COPYRIGHT OF THIS DRAWING AND IT SHALL NOT BE REPRODUCED BY ANY OTHER WITHOUT THE PRIOR WRITTEN PERMISSION

(CONT.) 9.6 EMERGENCY EQUIPMENT MARKINGS LIST OF NUMERIC INDEX

ITEM NR.	OEM PART NUMBER (FOR REFERENCE ONLY)	ALTERNATIVE EPA PART NUMBER	DESCRIPTION	LAYOUT	SIZE (WXH); LETTERS HEIGHT	COLOR INDEX	MATERIAL COMBINATION	IPC/DWG REFERENCE	NOTE
57	D2527719933200	JC320E030A07	ELT	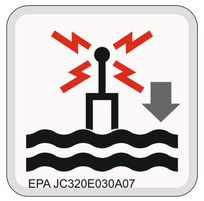	44X44	4.1 4.3 4.4 4.7 4.16	E	N/A	
	D2527719932200	JC320E030A08	FLASH LIGHT		44X44	4.1 4.3 4.4 4.16	E	N/A	
	D2527719930000 D2528835336700	JC320E030A09	OXYGEN AND MASK	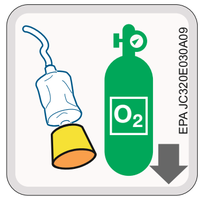	44X44 3; 4	4.2 4.3 4.4 4.7 4.8 4.9 4.10 4.11 4.16	E	N/A	
	D2527708436300	JC320E030A10	LIFE RAFT		44X44	4.1 4.3 4.4 4.7 4.16	E	11-32-25	
58	D2527719933100 D2527700833000 D2527719933000 D2527700033000	JC320E031A01	MEGAPHONE		44X44	4.1 4.3 4.4	E	11-42-25	
	D2527719936100	JC320E031A21	BABY		44X44	4.1 4.3 4.4 4.7	E	N/A	

© J&C AERO EEU LTD. OWN THE COPYRIGHT OF THIS DRAWING AND IT SHALL NOT BE REPRODUCED BY ANY OTHER WITHOUT THE PRIOR WRITTEN PERMISSION

(CONT.) 9.6 EMERGENCY EQUIPMENT MARKINGS LIST OF NUMERIC INDEX

ITEM NR.	OEM PART NUMBER (FOR REFERENCE ONLY)	ALTERNATIVE EPA PART NUMBER	DESCRIPTION	LAYOUT	SIZE (WXH); LETTERS HEIGHT	COLOR INDEX	MATERIAL COMBINATION	IPC/DWG REFERENCE	NOTE
58	D2527719931200 D2527700831200	JC320E031A02	FIRE EXTINGUISHER		44X44	4.1 4.3 4.4	E	11-42-25	
	D2527719936000 D2527700836000	JC320E031A03	PBE		44X44	4.1 4.3 4.4	E	11-42-25	
	D2527719930100 D2527700830100	JC320E031A04	OXYGEN		44X44 3; 4	4.2 4.3 4.4 4.8	E	11-42-25	
	D2527701034200 D2527702034000 F2527711834500 D2527719934000	JC320E031A05	FIRST AID KIT		44X44	4.2 4.3 4.4	E	11-42-25	
	D2528626338700	JC320E031A06	FIRE FIGHTING GLOVES		44X44	4.1 4.3 4.4	E	11-42-25	
	D2527719933200	JC320E031A07	ELT	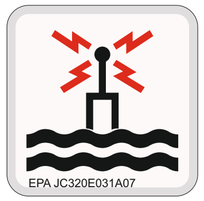	44X44	4.1 4.3 4.4 4.7	E	11-42-25	

© J&C AERO EEU LTD. OWN THE COPYRIGHT OF THIS DRAWING AND IT SHALL NOT BE REPRODUCED BY ANY OTHER WITHOUT THE PRIOR WRITTEN PERMISSION

(CONT.) 9.6 EMERGENCY EQUIPMENT MARKINGS LIST OF NUMERIC INDEX

ITEM NR.	OEM PART NUMBER (FOR REFERENCE ONLY)	ALTERNATIVE EPA PART NUMBER	DESCRIPTION	LAYOUT	SIZE (WXH); LETTERS HEIGHT	COLOR INDEX	MATERIAL COMBINATION	IPC/DWG REFERENCE	NOTE
58	D2527719932200 D2527700239300	JC320E031A08	FLASH LIGHT		44X44	4.1 4.3 4.4	E	11-42-25	
	D2528835336700	JC320E031A20	OXYGEN MASK	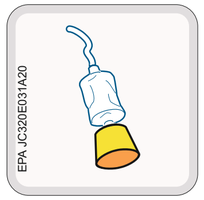	44X44 3; 4	4.3 4.4 4.7 4.8 4.9 4.10 4.11	E	N/A	
	F2527706136400 A2528131536400 D2527702036200	JC320E031A10	LIFE RAFT		44X44	4.1 4.3 4.4 4.7	E	11-42-25	
	D2527703637200	JC320E031A11	CREW LIFE VEST		44X44 4	4.1 4.3 4.4 4.7	E	11-42-25	
	D2527703638000 D2527719938000	JC320E031A12	PASSENGER LIFE VEST		44X44 4	4.3 4.4 4.7 4.9	E	11-42-25	
	D2527700136200	JC320E031A19	CRASH AXE		75X19 8	4.3 4.7	E	11-32-25	
	F2527706139500	JC320E032A09	DEFIBRILLATOR		76X17 6	4.3 4.7	E	11-42-25	

© J&C AERO EEU LTD. OWN THE COPYRIGHT OF THIS DRAWING AND IT SHALL NOT BE REPRODUCED BY ANY OTHER WITHOUT THE PRIOR WRITTEN PERMISSION

(CONT.) 9.6 EMERGENCY EQUIPMENT MARKINGS LIST OF NUMERIC INDEX

ITEM NR.	OEM PART NUMBER (FOR REFERENCE ONLY)	ALTERNATIVE EPA PART NUMBER	DESCRIPTION	LAYOUT	SIZE (WXH); LETTERS HEIGHT	COLOR INDEX	MATERIAL COMBINATION	IPC/DWG REFERENCE	NOTE
58	D2527703638000 D2527709838000	JC320E031A13	SPARE LIFE VEST		44X44 4	4.3 4.4 4.7 4.9	E	11-42-25	
	D25277199377	JC320E031A14	INFANT LIFE VEST		44X44 4	4.3 4.4 4.7 4.10	E	N/A	
	F2527706738400	JC320E031A15	INFANT SEAT BELTS	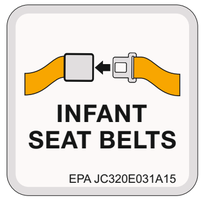	44X44 4	4.3 4.4 4.7 4.10	E	11-42-25	
	F2527706738200	JC320E031A16	SPARE SEAT BELTS	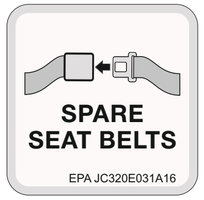	44X44 4	4.3 4.4 4.5 4.7	E	11-42-25	
	D2527719938100	JC320E031A17	EXTENSION SEAT BELTS	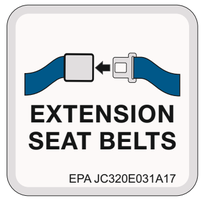	44X44 4	4.3 4.4 4.7 4.11	E	11-42-25	
	N/A	JC320E031A18	BIOHAZARD KIT		44X44 4	4.2 4.3 4.4 4.9	E	N/A	

© J&C AERO EEU LTD. OWN THE COPYRIGHT OF THIS DRAWING AND IT SHALL NOT BE REPRODUCED BY ANY OTHER WITHOUT THE PRIOR WRITTEN PERMISSION

(CONT.) 9.6 EMERGENCY EQUIPMENT MARKINGS LIST OF NUMERIC INDEX

ITEM NR.	OEM PART NUMBER (FOR REFERENCE ONLY)	ALTERNATIVE EPA PART NUMBER	DESCRIPTION	LAYOUT	SIZE (WXH); LETTERS HEIGHT	COLOR INDEX	MATERIAL COMBINATION	IPC/DWG REFERENCE	NOTE
58	N/A	JC320E031A09	OXYGEN AND MASK		44X44	4.2 4.3 4.4 4.7 4.8 4.9 4.10 4.11	E	N/A	
59	N/A	JC320E032A01	EMERGENCY EQUIPMENT ONLY	EMERGENCY EQUIPMENT ONLY EPA JC320E032A01	143X17 6	4.1 4.3	E	N/A	
	D2527700840800	JC320E032A02	NO STOWAGE	NO STOWAGE EPA JC320E032A02	65X16 6	4.3 4.7	E	11-32-25	
	A2528132043200	JC320E032A03	NO STOWAGE - VIDEO EQUIPMENT	NO STOWAGE - VIDEO EQUIPMENT EPA JC320E032A03	102X27 6	4.3 4.7	E	11-32-25	
60	D2527702235200	JC320E033A10	RELEASE KEY FOR PASSENGER OXYGEN	Release key for passenger oxygen EPA JC320E033A10	85X28 6	4.3 4.7	E	11-32-25	
	D2527710449000 D2528837649000	JC320E033A02	SEAT MUST BE OCCUPIED	SEAT MUST BE OCCUPIED DURING TAKE-OFF AND LANDING EPA JC320E033A02	134X26 6	4.3 4.7	E	11-32-25	
	D2528631941600	JC320E033A03	SEAT BELTS MUST BE STORED AFTER USAGE	SEAT BELTS MUST BE STORED AFTER USAGE EPA JC320E033A03	106X26 6	4.3 4.7	E	11-32-25	
	D2528837822600	JC320E033A11	SAFETY PIN	Safety pin EPA JC320E033A11	62X17 8; 6	4.3 4.7	E	11-32-25 11-52-25	
61	D2527700814200 D2527719937600	JC320E034A01	SURVIVAL KIT	SURVIVAL KIT EPA JC320E034A01	68X17 6	4.3 4.7	E	11-32-25	
	D2527719937400	JC320E034A02	DEMO KIT	DEMO KIT EPA JC320E034A02	48X17 6	4.3 4.7	E	11-32-25	
	N/A	JC320E034A13	UNIVERSAL PRECAUTION KIT	UNIVERSAL PRECAUTION KIT EPA JC320E034A13	130X17 6	4.3 4.7	E	N/A	

© J&C AERO EEU LTD. OWN THE COPYRIGHT OF THIS DRAWING AND IT SHALL NOT BE REPRODUCED BY ANY OTHER WITHOUT THE PRIOR WRITTEN PERMISSION

(CONT.) 9.6 EMERGENCY EQUIPMENT MARKINGS LIST OF NUMERIC INDEX

ITEM NR.	OEM PART NUMBER (FOR REFERENCE ONLY)	ALTERNATIVE EPA PART NUMBER	DESCRIPTION	LAYOUT	SIZE (WXH); LETTERS HEIGHT	COLOR INDEX	MATERIAL COMBINATION	IPC/DWG REFERENCE	NOTE
61	N/A	JC320E034A11	DANGEROUS GOODS KIT	DANGEROUS GOODS KIT EPA JC320E034A11	115X17 6	4.3 4.7	E	N/A	
	D2527700840300	JC320E034A03	BABY BASINET	BABY BASINET EPA JC320E034A03	72X17 6	4.3 4.7	E	11-32-25	
	N/A	JC320E034A04	PLUG-IN TABLE INSIDE	PLUG-IN TABLE INSIDE EPA JC320E034A04	105X17 6	4.3 4.7	E	N/A	
	A2528131535100	JC320E034A05	LIFE VEST FOR INFANT	LIFE VEST FOR INFANT EPA JC320E034A05	105X17 6	4.3 4.7	E	11-32-25	
	F2527710238300	JC320E034A06	WHEEL CHAIR	WHEEL CHAIR EPA JC320E034A06	70X17 6	4.3 4.7	E	11-32-25	
	A2528131934300	JC320E034A07	DOCTOR'S KIT	DOCTOR'S KIT EPA JC320E034A07	70X17 6	4.3 4.7	E	11-32-25	
	D2528838634500	JC320E034A08	EMERGENCY MEDICAL KIT	EMERGENCY MEDICAL KIT EPA JC320E034A08	120X17 6	4.3 4.7	E	11-32-25	
	N/A	JC320E034A12	RESTRAINT KIT	RESTRAINT KIT EPA JC320E034A12	74X17 6	4.3 4.7	E	N/A	
62	D2527706613500	JC320E035A01	PRESS	PRESS EPA JC320E035A01	38X17 6	4.3 4.7	E	11-32-25	
63	D2527700842300 D2527700242300	JC320E036A01	LIFT	LIFT EPA JC320E036A01	33X17 6	4.3 4.7	E	11-32-25	INSTALLED ON LEVER
	D2527700842200	JC320E036A02	LIFT LEVER TO UNLOCK SEAT	LIFT LEVER TO UNLOCK SEAT EPA JC320E036A02	133X17 6	4.3 4.7	E	11-32-25	

© J&C AERO EEU LTD. OWN THE COPYRIGHT OF THIS DRAWING AND IT SHALL NOT BE REPRODUCED BY ANY OTHER WITHOUT THE PRIOR WRITTEN PERMISSION

(CONT.) 9.6 EMERGENCY EQUIPMENT MARKINGS LIST OF NUMERIC INDEX

ITEM NR.	OEM PART NUMBER (FOR REFERENCE ONLY)	ALTERNATIVE EPA PART NUMBER	DESCRIPTION	LAYOUT	SIZE (WXH); LETTERS HEIGHT	COLOR INDEX	MATERIAL COMBINATION	IPC/DWG REFERENCE	NOTE
64	D2527719937900	JC320E037A01	LIFE LINE	LIFE LINE EPA JC320E037A01	47X17 6	4.3 4.7	E	11-32-25	
65	N/A	JC320E020A16	LOAD LIMIT	LOAD LIMIT __kg __lbs EPA JC320E020A16	85X27 6	4.3 4.7	E	N/A	UNIVERSAL LOAD LIMIT PLACARD, LOAD LIMIT TO BE FILLED
66	D2527700942000	JC320E015A61	TABLE MUST BE STOWED	TABLE MUST BE STOWED DURING TAKE-OFF AND LANDING EPA JC320E015A61	147X25 6	4.3 4.7	E	11-42-25	INSTALL ONLY WITH RELEVANT EQUIPMENT
	N/A	JC320E015A61	TABLE MUST BE STOWED	TABLE MUST BE STOWED FOR TAXI, TAKE OFF, LANDING AND TURBULENT WEATHER EPA JC320E015A61	210X26 6	4.3 4.7	E	N/A	INSTALL ONLY WITH RELEVANT EQUIPMENT
67	D2527719940600	JC320E031A27	PRESSURE INDICATOR FOR SLIDE BOTTLE	Pressure indicator for slide bottle EPA JC320E031A27	110X30 8	4.3 4.7	E	11-42-25	
68	D2527706647100	JC320E024A16	PROHIBITED AREA	Prohibited area for class divider EPA JC320E024A16	80X26 6	4.1 4.3	E	11-42-25	
69	D2527706647000	JC320E024A15	PROHIBITED AREA	Prohibited area for class divider EPA JC320E024A15	80X26 6	4.1 4.3	E	11-42-25	
70	D2527707740400	JC320E031A25	USE FOR MEDICAL EQUIPMENT ONLY	Use for medical equipment only 28 V / DC 115 V / AC 400 Hz EPA JC320E031A25	75X65 6	4.3 4.7	E	11-42-25	NOT ILLUSTRATED. INSTALLED IN SERVICE CHANNEL, C63-C64 LH
71	D2528843234600	JC320E030A23	WHEEL CHAIR	WHEEL CHAIR EPA JC320E030A23	115X19 8	4.3 4.7 4.16	E	11-52-25	

© J&C AERO EEU LTD. OWN THE COPYRIGHT OF THIS DRAWING AND IT SHALL NOT BE REPRODUCED BY ANY OTHER WITHOUT THE PRIOR WRITTEN PERMISSION

DRAWING NUMBER: HES113JCAERO2099

9.7 TYPICAL EMERGENCY EQUIPMENT PLACARD INSTALLATION LAYOUT IN COCKPIT AND ON COCKPIT SEATS

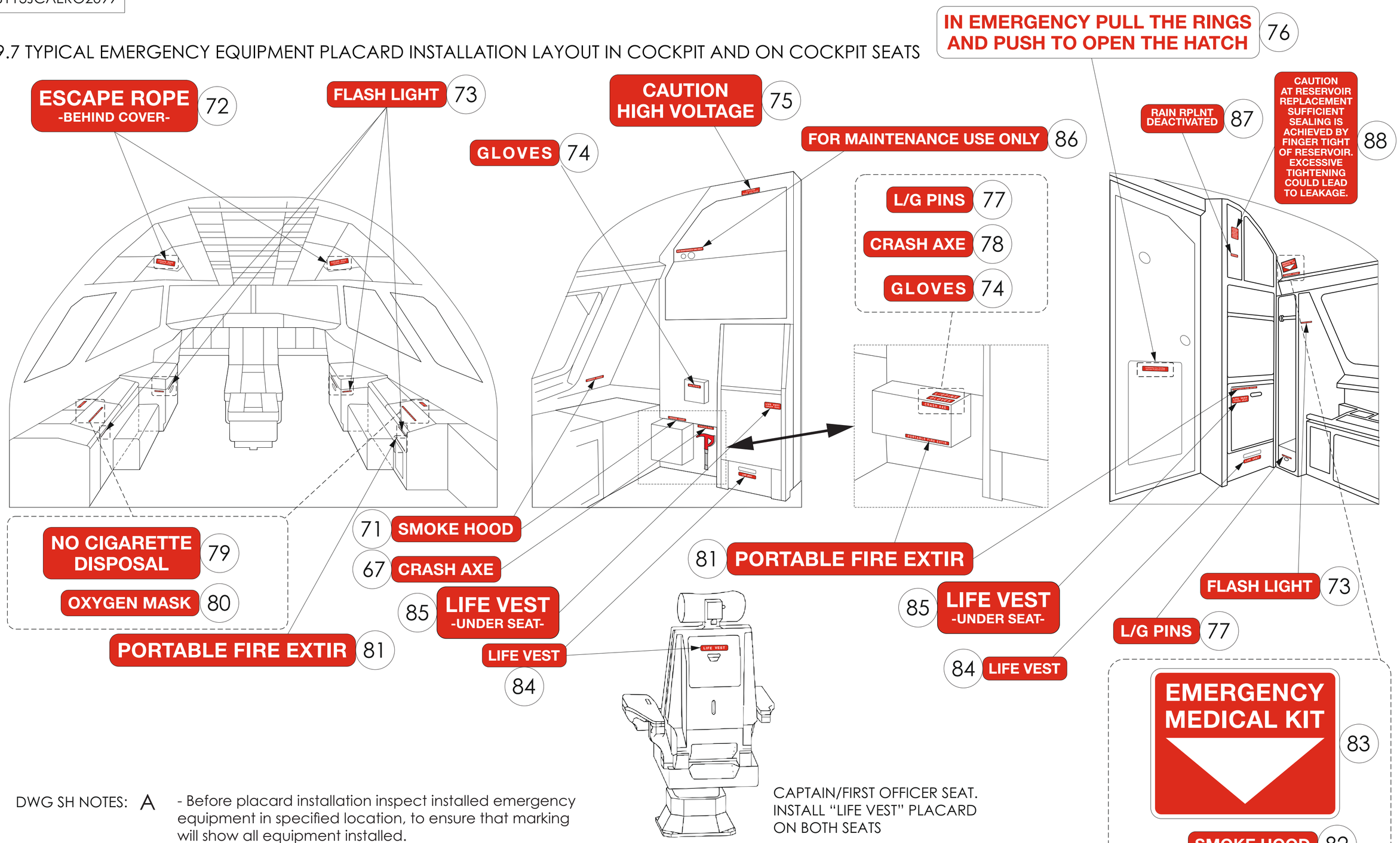

CAPTAIN/FIRST OFFICER SEAT.
INSTALL "LIFE VEST" PLACARD
ON BOTH SEATS

DWG SH NOTES:

A - Before placard installation inspect installed emergency equipment in specified location, to ensure that marking will show all equipment installed.

B - Install placards in accordance with latest approved emergency equipment layout.

C - Refer to current AIPC or CMM or TC Holder drawings or approved modification for applicable placards and location.

J&C AERO EEU EASA APPROVAL NO: EASA.21J.580	WWW.THISISDOA.EU INFO@THISISDOA.EU PHONE: +353 15 269768	AIRCRAFT: SEE TABLE 1	TOLERANCES OVERALL PLACARD DIMENSIONS ±1MM; RADIUS ±1MM; LETTERING/GRAPHIC DIMENSIONS +1.0/-0.5 MM; INSTALLATION ±4MM; ANGULAR ±5°	DRAWN BY: SEE JCAERO/ECN/2099
	MSN: SEE TABLE 1	REGISTRATION: -	SCALE: NTS / SIZE: A2 / ALL DIMENSIONS ARE MILLIMETERS / THIRD ANGLE PROJECTION	CHECKED BY: SEE JCAERO/ECN/2099
	TITLE: INTERIOR PLACARDS ILLUSTRATED CATALOGUE			
	DRAWING NUMBER: HES113JCAERO2099		SHEET 81 OF 98	REV. C

© J&C AERO EEU LTD. OWN THE COPYRIGHT OF THIS DRAWING AND IT SHALL NOT BE REPRODUCED BY ANY OTHER WITHOUT THE PRIOR WRITTEN PERMISSION

DOC/302 ISSUE 1.0

(CONT.) 9.7 TYPICAL EMERGENCY EQUIPMENT PLACARD INSTALLATION LAYOUT IN COCKPIT AND ON COCKPIT SEATS

ITEM NR.	OEM PART NUMBER (FOR REFERENCE ONLY)	ALTERNATIVE EPA PART NUMBER	DESCRIPTION	LAYOUT	SIZE (WXH); LETTERS HEIGHT	COLOR INDEX	MATERIAL COMBINATION	IPC/DWG REFERENCE	NOTE
72	D1131024920000	JC320E100A01	ESCAPE ROPE BEHIND COVER	ESCAPE ROPE -BEHIND COVER- EPA JC320E100A01	90X28 5; 8	4.1 4.8	E	11-31-25	
73	D1131006120000 D1131029120000	JC320E100A02	FLASH LIGHT	FLASH LIGHT EPA JC320E100A02	83X18 8	4.1 4.8	E	11-31-25	
74	D1131005720000	JC320E100A03	GLOVES	GLOVES EPA JC320E100A03	62X18 8	4.1 4.8	E	11-31-25	
75	NSA931031R01	JC320E100A04	CAUTION HIGH VOLTAGE	CAUTION HIGH VOLTAGE EPA JC320E100A04	91X31 8	4.1 4.8	E	11-31-31	
76	D2527716320100	JC320E026A05	IN EMERGENCY PULL THE RINGS	IN EMERGENCY PULL THE RINGS AND PUSH TO OPEN THE HATCH EPA JC320E100A05	147X28 6	4.8 41	E	11-42-25	
77	D1131005520000	JC320E100A06	L/G PINS	L/G PINS EPA JC320E100A06	60X18 8	4.1 4.8	E	11-31-25	
78	D1131005620000	JC320E100A07	CRASH AXE	CRASH AXE EPA JC320E100A07	76X18 8	4.1 4.8	E	11-31-25	
79	002074-01	JC320E100A24	WASTE NO CIGARETTE DISPOSAL	WASTE NO CIGARETTE DISPOSAL EPA JC320E100A24	72X33 4,8	4.1 4.8 4.12	E	11-31-25	
80	002073-01	JC320E100A09	OXYGEN MASK	OXYGEN MASK EPA JC320E100A09	96X18 8	4.1 4.8	E	11-31-25	
81	D1131005820000	JC320E100A10	PORTABLE FIRE EXTINGUISHER	PORTABLE FIRE EXTIR EPA JC320E100A10	136X18 8	4.1 4.8	E	11-31-25	

© J&C AERO EEU LTD. OWN THE COPYRIGHT OF THIS DRAWING AND IT SHALL NOT BE REPRODUCED BY ANY OTHER WITHOUT THE PRIOR WRITTEN PERMISSION

(CONT.) 9.7 TYPICAL EMERGENCY EQUIPMENT PLACARD INSTALLATION LAYOUT IN COCKPIT AND ON COCKPIT SEATS

ITEM NR.	OEM PART NUMBER (FOR REFERENCE ONLY)	ALTERNATIVE EPA PART NUMBER	DESCRIPTION	LAYOUT	SIZE (WXH); LETTERS HEIGHT	COLOR INDEX	MATERIAL COMBINATION	IPC/DWG REFERENCE	NOTE
82	D1131006020000	JC320E100A11	SMOKE HOOD		90X18 8	4.1 4.8	E	11-31-25	
83	D1131046120000	JC320E100A12	EMERGENCY MEDICAL KIT		88X70 8	4.1 4.8	E	11-31-25	
84	SCN900-023-01 00-3248	JC320E100A13	LIFE VEST		65X18 8	4.1 4.8	E	N/A	
85	00-3233	JC320E100A14	LIFE VEST UNDER SEAT		66X28 5; 8	4.1 4.8	E	N/A	
86	N/A	JC320E100A16	FOR MAINTENANCE USE ONLY		180X28 8	4.1 4.8	E	N/A	
87	D1131103220000	JC320E100A17	RAIN RPLNT DEACTIVATED		32X11 3	4.1 4.8	E	11-31-30	
88	002084-01	JC320E100A18	CAUTION AT RESERVOIR REPLACEMENT SUFFICIENT SEALING IS ACHEVED		32X51 3	4.1 4.8	E	11-31-30	

© J&C AERO EEU LTD. OWN THE COPYRIGHT OF THIS DRAWING AND IT SHALL NOT BE REPRODUCED BY ANY OTHER WITHOUT THE PRIOR WRITTEN PERMISSION

10. TYPICAL LAVATORY PLACARD INSTALLATION LAYOUT AND LIST OF ITEMS NUMERIC INDEX

TABLE OF CONTENT: SHEET

10.1 LAVATORY DOOR AND INTERIOR 85-93

© J&C AERO EEU LTD. OWN THE COPYRIGHT OF THIS DRAWING AND IT SHALL NOT BE REPRODUCED BY ANY OTHER WITHOUT THE PRIOR WRITTEN PERMISSION

DRAWING NUMBER: HES113JCAERO2099

10.1 TYPICAL LAVATORY PLACARD INSTALLATION

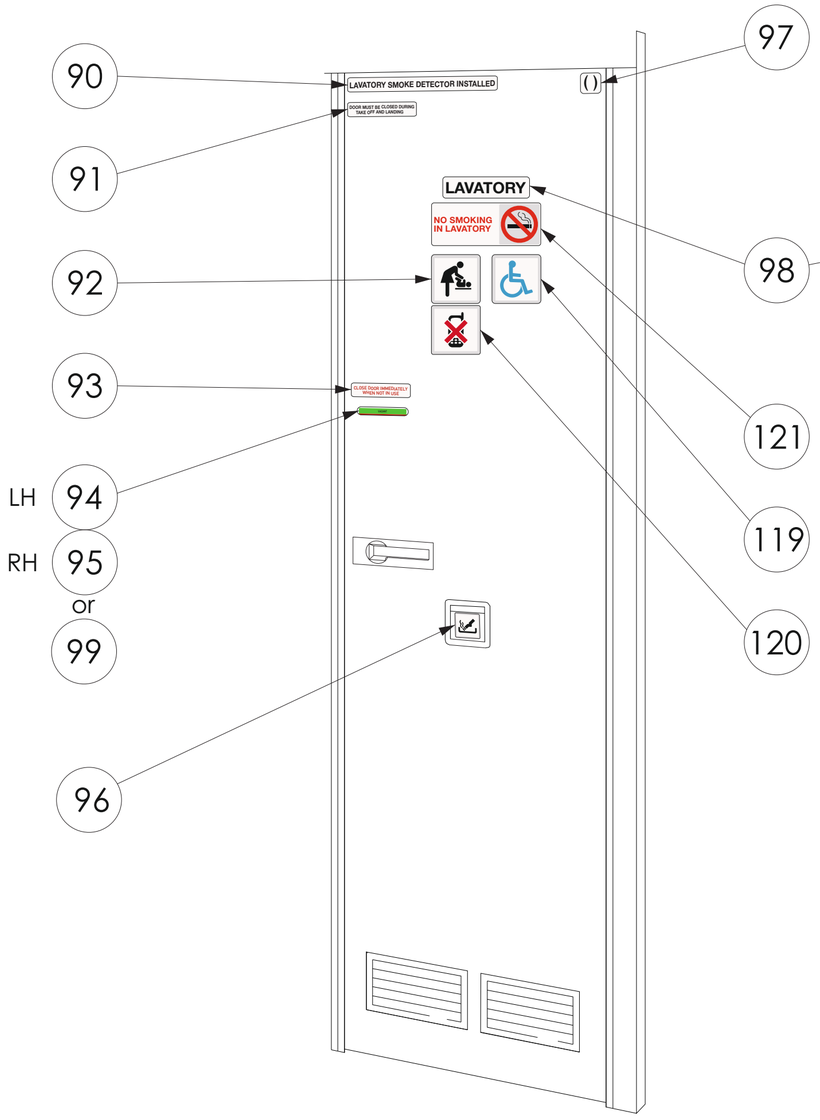

SINGLE BLADE DOOR

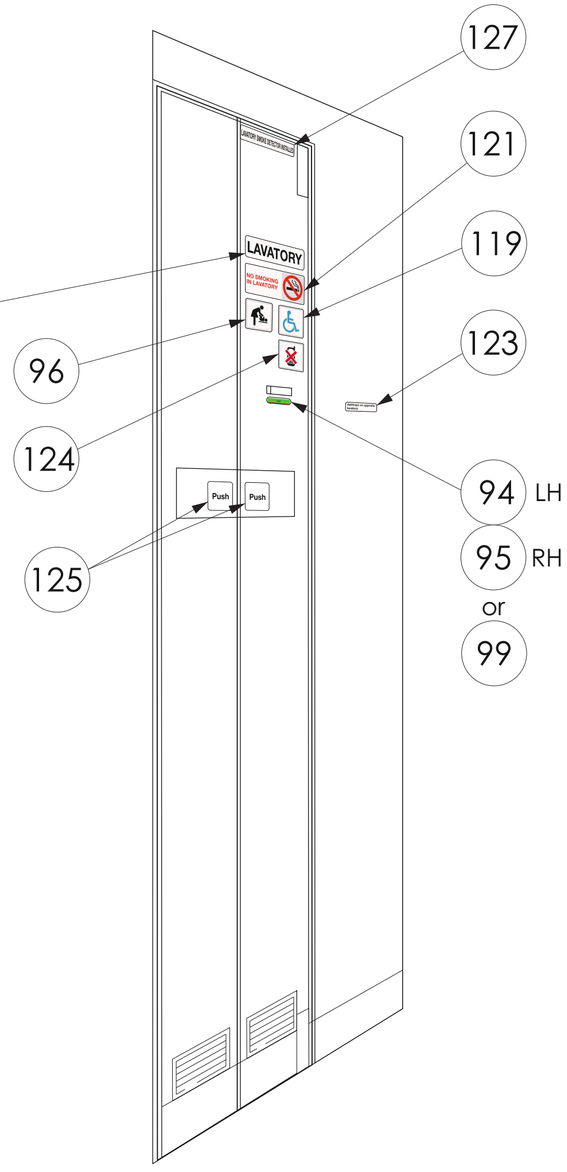

BI-FOLDING DOOR (OPTIONAL)

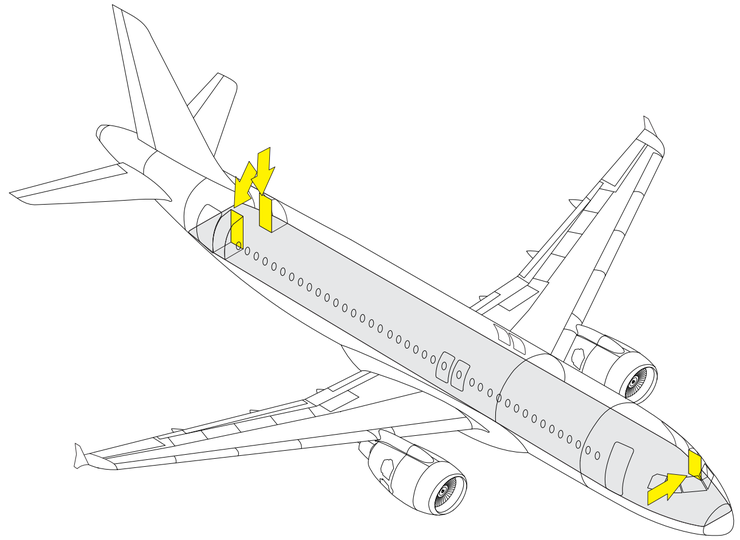

DWG SH NOTES: A - Refer to current AIPC or CMM or TC Holder drawings or approved modification for applicable placards.

J&C AERO EEU
EASA APPROVAL NO: EASA.21J.580

WWW.THISISDOA.EU
INFO@THISISDOA.EU
PHONE: +353 15 269768

AIRCRAFT: SEE TABLE 1

TOLERANCES: OVERALL PLACARD DIMENSIONS ±1MM; RADIUS ±1MM; LETTERING/GRAPHIC DIMENSIONS +1.0/-0.5 MM; INSTALLATION ±4MM; ANGULAR ±5°.

DRAWN BY: SEE JCAERO/ECN/2099

MSN: SEE TABLE 1

REGISTRATION: -

SCALE: NTS

SIZE: A2

ALL DIMENSIONS ARE MILLIMETERS

THIRD ANGLE PROJECTION

CHECKED BY: SEE JCAERO/ECN/2099

TITLE: INTERIOR PLACARDS ILLUSTRATED CATALOGUE

DRAWING NUMBER: HES113JCAERO2099

SHEET 85 OF 98

REV. C

© J&C AERO EEU LTD. OWN THE COPYRIGHT OF THIS DRAWING AND IT SHALL NOT BE REPRODUCED BY ANY OTHER WITHOUT THE PRIOR WRITTEN PERMISSION

DOC/302 ISSUE 1.0

DRAWING NUMBER: HES113JCAERO2099

(CONT.) 10.1 TYPICAL LAVATORY PLACARD INSTALLATION

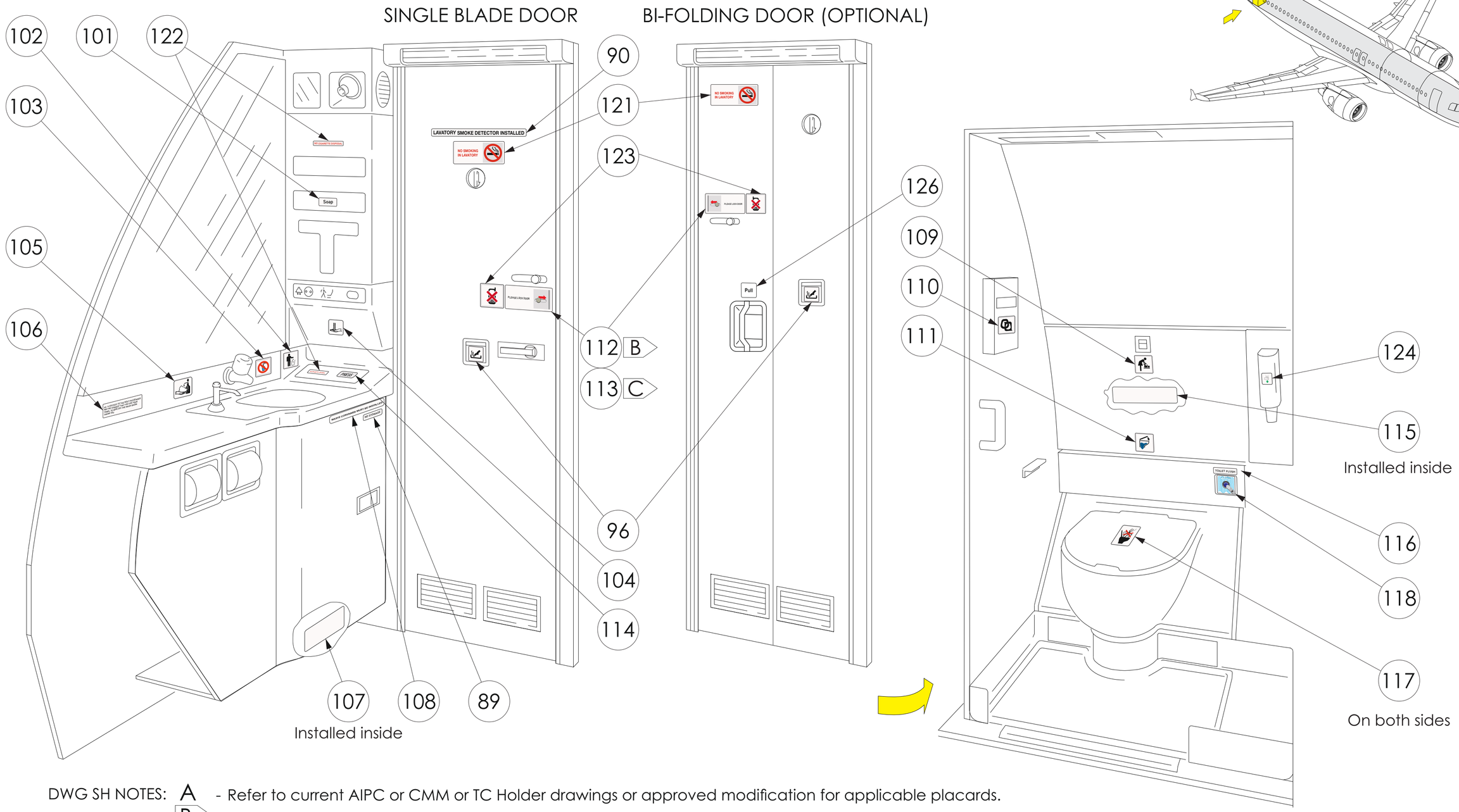

DWG SH NOTES:
- A - Refer to current AIPC or CMM or TC Holder drawings or approved modification for applicable placards.
- B - Installed on lavatory "E" door.
- C - Installed on lavatory "A" and "D" doors.

J&C AERO EEU
EASA APPROVAL NO: EASA.21J.580

WWW.THISISDOA.EU
INFO@THISISDOA.EU
PHONE: +353 15 269768

AIRCRAFT: SEE TABLE 1
MSN: SEE TABLE 1
REGISTRATION: -

TOLERANCES: OVERALL PLACARD DIMENSIONS ±1MM; RADIUS ±1MM; LETTERING/GRAPHIC DIMENSIONS +1.0/-0.5 MM; INSTALLATION ±4MM; ANGULAR ±5°.

SCALE: NTS
SIZE: A2
ALL DIMENSIONS ARE MILLIMETERS
THIRD ANGLE PROJECTION

DRAWN BY: SEE JCAERO/ECN/2099
CHECKED BY: SEE JCAERO/ECN/2099

TITLE: INTERIOR PLACARDS ILLUSTRATED CATALOGUE

DRAWING NUMBER: HES113JCAERO2099
SHEET 86 OF 98
REV. C

© J&C AERO EEU LTD. OWN THE COPYRIGHT OF THIS DRAWING AND IT SHALL NOT BE REPRODUCED BY ANY OTHER WITHOUT THE PRIOR WRITTEN PERMISSION

DOC/302 ISSUE 1.0

(CONT.) 10.1 TYPICAL LAVATORY PLACARD INSTALLATION

ITEM NR.	OEM PART NUMBER (FOR REFERENCE ONLY)	ALTERNATIVE EPA PART NUMBER	DESCRIPTION	LAYOUT	SIZE (WXH); LETTERS HEIGHT	COLOR INDEX	MATERIAL COMBINATION	IPC/DWG REFERENCE	NOTE
89	D2527714740800	JC320E032A02	NO STOWAGE	NO STOWAGE EPA JC320E032A02	65X16 6	4.3 4.7	E	11-42-25	
90	D2527710954900	JC320E050A01	LAVATORY SMOKE DETECTOR INSTALLED	LAVATORY SMOKE DETECTOR INSTALLED	365X23 12	4.3 4.7	E	11-42-25	
91	F2527709443200 D2527720043200 D2527719943200	JC320E050A02	DOOR MUST BE CLOSED	DOOR MUST BE CLOSED DURING TAKE-OFF AND LANDING EPA JC320E050A02	126X26 6	4.3 4.7	E	11-42-25	
92	D2527719956400 D2527700852400	JC320E051A01	NURSING TABLE	 EPA JC320E051A01	75X75	4.3 4.4 4.7	E	11-42-25	
93	D2527711851300	JC320E050A03	CLOSE DOOR IMMEDIATELY WHEN NOT IN USE	CLOSE DOOR IMMEDIATELY WHEN NOT IN USE EPA JC320E050A03	110X26 6	4.1 4.3	E	11-42-25	
94	D2527715656400	JC320E050A04	VACANT / OCCUPIED	VACANT OCCUPIED EPA JC320E050A04	135X32 6	4.1 4.2 4.8	E	11-42-25	INSTALL ON LH SIDE FITTED ON INSTALLATION
95	D2527715656500	JC320E050A05	VACANT / OCCUPIED	VACANT OCCUPIED EPA JC320E050A05	135X32 6	4.1 4.2 4.8	E	11-42-25	INSTALL ON RH SIDE FITTED ON INSTALLATION

© J&C AERO EEU LTD. OWN THE COPYRIGHT OF THIS DRAWING AND IT SHALL NOT BE REPRODUCED BY ANY OTHER WITHOUT THE PRIOR WRITTEN PERMISSION

(CONT.) 10.1 TYPICAL LAVATORY PLACARD INSTALLATION

ITEM NR.	OEM PART NUMBER (FOR REFERENCE ONLY)	ALTERNATIVE EPA PART NUMBER	DESCRIPTION	LAYOUT	SIZE (WXH); LETTERS HEIGHT	COLOR INDEX	MATERIAL COMBINATION	IPC/DWG REFERENCE	NOTE
96	D2527700852000 D2527700052000	JC320E051A02	CIGARETTE DISPOSAL		50X45	4.3 4.7	E	11-42-25	
97	D2527700955000 D2527719955000	JC320E050A06	LAVATORY "A"		30X30 20	4.3 4.7	E	11-42-25	
	D2527700955200	JC320E050A07	LAVATORY "D"		30X30 20	4.3 4.7	E	11-42-25	
	D2527700955300	JC320E050A08	LAVATORY "E"		30X30 20	4.3 4.7	E	11-42-25	
98	A2528131550700	JC320E050A09	LAVATORY		155X32 20	4.3 4.7	E	11-42-25	
99	D2527715656500	JC320E050A42	OCCUPIED/ VACANT		134X16 6	4.1 4.2 4.8	E	11-42-25	
100	D2527715656500	JC320E050A43	VACANT / OCCUPIED		134X16 6	4.1 4.2 4.8	E	11-42-25	

© J&C AERO EEU LTD. OWN THE COPYRIGHT OF THIS DRAWING AND IT SHALL NOT BE REPRODUCED BY ANY OTHER WITHOUT THE PRIOR WRITTEN PERMISSION

(CONT.) 10.1 TYPICAL LAVATORY PLACARD INSTALLATION

ITEM NR.	OEM PART NUMBER (FOR REFERENCE ONLY)	ALTERNATIVE EPA PART NUMBER	DESCRIPTION	LAYOUT	SIZE (WXH); LETTERS HEIGHT	COLOR INDEX	MATERIAL COMBINATION	IPC/DWG REFERENCE	NOTE
101	N/A	JC320E050A12	SOAP		33X16 6	4.3 4.7	E	N/A	
102	D2527719957700 D2527700053600 D2527700053700	JC320E051A05	WASTE BIN		44X44	4.3 4.4 4.7	E	11-42-25	
103	D2527719957300 D2527700853300 D2527700053300	JC320E051A06	DO NOT DRINK		44X44	4.1 4.3 4.4 4.7 4.11	E	11-42-25	
104	D2527700833500 D2527700053500 D2527719957500	JC320E051A07	SOAP	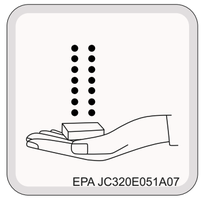	44X44	4.3 4.4 4.7	E	11-42-25	
105	D2527700833500	JC320E051A08	SOAP		44X44 3,5	4.3 4.4 4.7 4.8	E	11-42-25	
106	D2527714753300	JC320E050A13	USE YOUR TOWEL TO WIPE OFF THE WASH BIN BASIN	AS A COURTESY TO THE NEXT PASSENGER MAY WE SUGGEST THAT YOU USE YOUR TOWEL TO WIPE OFF THE WASH BASIN THANK YOU EPA JC320E050A13	164X45 6	4.3 4.7	E	11-42-25	

© J&C AERO EEU LTD. OWN THE COPYRIGHT OF THIS DRAWING AND IT SHALL NOT BE REPRODUCED BY ANY OTHER WITHOUT THE PRIOR WRITTEN PERMISSION

(CONT.) 10.1 TYPICAL LAVATORY PLACARD INSTALLATION

ITEM NR.	OEM PART NUMBER (FOR REFERENCE ONLY)	ALTERNATIVE EPA PART NUMBER	DESCRIPTION	LAYOUT	SIZE (WXH); LETTERS HEIGHT	COLOR INDEX	MATERIAL COMBINATION	IPC/DWG REFERENCE	NOTE
107	F2527708953800	JC320E050A14	FRESH WATER SYSTEM OPEN/SHUT	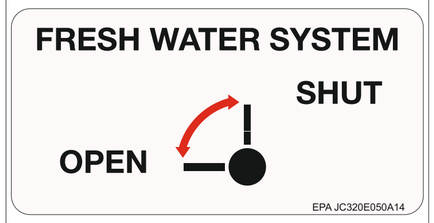	110X55 6	4.1 4.3 4.7	E	11-42-25	
108	D2527710534600	JC320E050A15	WASTE CONTAINER MUST BE INSTALLED		182X17 6	4.3 4.7	E	11-42-25	
109	D2527719956400 D2527700852400	JC320E051A09	BABY CHANGING ROOM		44X44	4.3 4.4 4.7	E	11-42-25	
110	A2528124052200 D2527719956200	JC320E051A10	SANITARY NAPKINS		75X75	4.3 4.4 4.7	E	11-42-25	
111	D2527719952600 D2527700052100	JC320E051A11	TOILET FLUSH		75X75	4.3 4.4 4.7 4.11	E	11-42-25	

© J&C AERO EEU LTD. OWN THE COPYRIGHT OF THIS DRAWING AND IT SHALL NOT BE REPRODUCED BY ANY OTHER WITHOUT THE PRIOR WRITTEN PERMISSION

(CONT.) 10.1 TYPICAL LAVATORY PLACARD INSTALLATION

ITEM NR.	OEM PART NUMBER (FOR REFERENCE ONLY)	ALTERNATIVE EPA PART NUMBER	DESCRIPTION	LAYOUT	SIZE (WXH); LETTERS HEIGHT	COLOR INDEX	MATERIAL COMBINATION	IPC/DWG REFERENCE	NOTE
112	D2527700851200	JC320E050A16	PLEASE LOCK DOOR	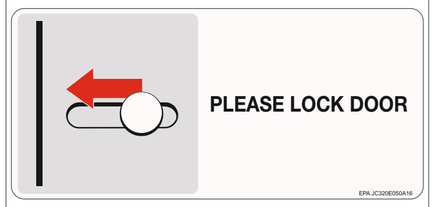	160X74 6	4.1 4.3 4.4 4.7	E	11-42-25	INSTALL ON LAVATORY “E” DOOR
113	D2527700851100	JC320E050A17	PLEASE LOCK DOOR	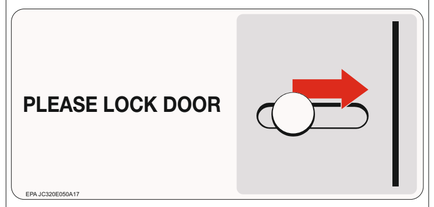	160X74 6	4.1 4.3 4.4 4.7	E	11-42-25	INSTALL ON LAVATORY “A” and “D” DOORS
114	N/A	JC320C035A01	PRESS		38X17 6	4.3 4.7	E	N/A	
115	D2527714759100 D2527715759100	JC320E050A19	NEVER LEAVE THE INFANT UNATTENDED ON THE NURSING TABLE		206X26 6	4.3 4.7	E	11-42-25	
116	N/A	JC320E050A20	TOILET FLUSH		70x17 6	4.3 4.7	E	N/A	
117	D2527719953900	JC320E051A12	DO NOT THROW WASTE INTO WATER CLOSET		75X75	4.1 4.3 4.4 4.7	E	11-42-25	

© J&C AERO EEU LTD. OWN THE COPYRIGHT OF THIS DRAWING AND IT SHALL NOT BE REPRODUCED BY ANY OTHER WITHOUT THE PRIOR WRITTEN PERMISSION

(CONT.) 10.1 TYPICAL LAVATORY PLACARD INSTALLATION

ITEM NR.	OEM PART NUMBER (FOR REFERENCE ONLY)	ALTERNATIVE EPA PART NUMBER	DESCRIPTION	LAYOUT	SIZE (WXH); LETTERS HEIGHT	COLOR INDEX	MATERIAL COMBINATION	IPC/DWG REFERENCE	NOTE
118	N/A	JC320E051A13	FLUSH PUSH		75X75 3,5; 8	4.3 4.4 4.7 4.8 4.11 4.12 4.13 4.14 4.15	E	N/A	
119	D2527719952500	JC320E051A03	WHEEL CHAIR ACCESS		75X75	4.3 4.4 4.11	E	11-42-25	INSTALLED ONLY ON LAVATORIES EQUIPPED FOR DISABLED PEOPLE
120	D2528715343700	JC320E051A04	MOBILE PHONES FORBIDDEN		75X75	4.1 4.3 4.4 4.7 4.8	E	11-42-25	

© J&C AERO EEU LTD. OWN THE COPYRIGHT OF THIS DRAWING AND IT SHALL NOT BE REPRODUCED BY ANY OTHER WITHOUT THE PRIOR WRITTEN PERMISSION

(CONT.) 10.1 TYPICAL LAVATORY PLACARD INSTALLATION

ITEM NR.	OEM PART NUMBER (FOR REFERENCE ONLY)	ALTERNATIVE EPA PART NUMBER	DESCRIPTION	LAYOUT	SIZE (WXH); LETTERS HEIGHT	COLOR INDEX	MATERIAL COMBINATION	IPC/DWG REFERENCE	NOTE
121	D2527700851000	JC320E050A10	NO SMOKING IN LAVATORY		230X90 13	4.1 4.3 4.4 4.7	E	11-42-25	
122	D2527714752300	JC320E050A11	NO CIGARETTE DISPOSAL		100X17 6	4.1 4.3	E	11-42-25	
123	D2527708459900	JC320E051A25	ASHTRAYS ON OPPOSITE LAVATORY		100X24 6	4.3 4.7	E	11-32-25	INSTALLED ONLY ON LAVATORIES EQUIPPED WITH AISLE MOUNTED CAS AND BI-FOLDING DOOR
124	D2527703558100	JC320E051A26	CUP	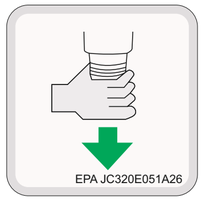	44X44	4.2 4.4 4.3 4.7	E	11-42-25	
125	F2527707059800 D2527700052700	JC320E050A22	PUSH		40X17 6	4.3 4.7	E	11-42-25	
126	D2527705756000	JC320E050A21	PULL		40X17 6	4.3 4.7	E	11-42-25	
127	D2527710954900	JC320E050A41	LAVATORY SMOKE DETECTOR INSTALLED		150X17 6	4.3 4.7	E	11-42-25	

© J&C AERO EEU LTD. OWN THE COPYRIGHT OF THIS DRAWING AND IT SHALL NOT BE REPRODUCED BY ANY OTHER WITHOUT THE PRIOR WRITTEN PERMISSION

11. KIT IDENTIFICATION

AC EFF.	KIT P/N	KIT DESCRIPTION	TYPE	MATERIAL COMBINATION	ITEM	QTY.	ITEM	QTY.	ITEM	QTY.	ITEM	QTY.	ITEM	QTY.
02210	HES113JCAERO2099B	PLACARD KIT This kit contains AC interior placards.	PLACARD	E	JC320E001A01	30	JC320E022A35	4	JC320E100A17	1				
					JC320E001A07	30	JC320E024A01	4	JC320E100A18	1				
					JC320E001A04	30	JC320E024A02	4	JC320E050A01	3				
					JC320E001A09	30	JC320E024A03	4	JC320E050A02	3				
					JC320F002A01	2	JC320E024A05	6	JC320E051A01	3				
					JC320F002A02	2	JC320E024A09	6	JC320E050A03	3				
					JC320F002A03	2	JC320E037A04	1	JC320E050A04	2				
					JC320F002A04	2	JC320E037A05	1	JC320E050A05	2				
					JC320F002A05	2	JC320E013A01	6	JC320E051A02	7				
					JC320F002A06	2	JC320E026A01	1	JC320E050A06	1				
					JC320F002A07	2	JC320E026A02	1	JC320E050A07	1				
					JC320F002A08	2	JC320E026A03	1	JC320E050A08	1				
					JC320F002A09	2	JC320E026A05	1	JC320E050A09	3				
					JC320F002A10	2	JC320E015A20	174	JC320E050A12	3				
					JC320F002A11	2	JC320E015A40	174	JC320E051A05	3				
					JC320F002A12	2	JC320E015A81	6	JC320E051A06	3				
					JC320F002A13	2	JC320E300A01	4	JC320E051A07	3				
					JC320F002A14	2	JC320E030A02	3	JC320E051A08	3				
					JC320F002A15	2	JC320E030A03	2	JC320E050A13	3				
					JC320F002A16	2	JC320E031A01	2	JC320E050A14	3				
					JC320F002A17	2	JC320E031A02	5	JC320E050A15	3				
					JC320F002A18	2	JC320E031A03	4	JC320E051A09	3				
					JC320F002A19	2	JC320E031A05	2	JC320E051A10	3				
					JC320F002A20	2	JC320E031A06	5	JC320E051A11	3				
					JC320F002A21	2	JC320E031A07	1	JC320E050A16	2				
					JC320F002A22	2	JC320E031A08	8	JC320E050A17	2				
					JC320F002A23	2	JC320E031A11	6	JC320E035A01	3				
					JC320F002A24	2	JC320E032A09	1	JC320E050A19	3				
					JC320F002A25	2	JC320E031A13	1	JC320E050A20	3				
					JC320F002A26	2	JC320E031A14	2	JC320E051A12	3				
					JC320F002A27	2	JC320E031A15	2	JC320E051A13	3				
					JC320F002A28	2	JC320E032A02	15	JC320E051A03	3				
					JC320F002A29	2	JC320E033A10	6	JC320E051A04	3				
					JC320F002A30	2	JC320E033A02	1	JC320E050A10	6				
					JC320E020A04	2	JC320E034A01	2	JC320E050A11	3				
					JC320E020A05	2	JC320E034A02	2	JC320E051A25	1				
					JC320E020A09	2	JC320E034A05	2	JC320E051A26	3				
					JC320E020A10	2	JC320E036A02	1	JC320E050A22	4				
					JC320E020A15	40	JC320E030A23	1	JC320E050A21	2				
					JC320E022A01	2	JC320E100A01	2	JC320E030A06	2				
					JC320E022A02	2	JC320E100A02	2	JC320E031A17	1				
					JC320E022A07	4	JC320E100A03	1	JC320E034A13	1				
					JC320E022A82	4	JC320E100A04	1	JC320E020A06	2				
					JC320E022A09	4	JC320E100A06	1	JC320E050A42	2				
					JC320E022A10	4	JC320E100A07	1	JC320E031A09	3				
					JC320E022A11	4	JC320E100A08	2	JC320E031A19	1				
					JC320E022A12	4	JC320E100A09	2	JC320E031A12	3				
					JC320E022A13	4	JC320E100A10	1						
					JC320E022A14	8	JC320E100A11	1						
					JC320E022A15	8	JC320E100A12	1						
					JC320E022A18	2	JC320E100A13	4						
					JC320E022A19	2	JC320E100A14	2						
					JC320E022A22	4	JC320E100A16	1						

© J&C AERO EEU LTD. OWN THE COPYRIGHT OF THIS DRAWING AND IT SHALL NOT BE REPRODUCED BY ANY OTHER WITHOUT THE PRIOR WRITTEN PERMISSION

11. KIT IDENTIFICATION

AC EFF.	KIT P/N	KIT DESCRIPTION	TYPE	MATERIAL COMBINATION	ITEM	QTY.	ITEM	QTY.	ITEM	QTY.	ITEM	QTY.	ITEM	QTY.	ITEM	QTY.
02157	HES113JCAERO2099-101	PLACARD KIT (A320) This kit contains AC interior placards.	PLACARD	E F	JC320E001A01	30	JC320E013A01	6	JC320E050A17	2						
					JC320E001A07	30	JC320E026A01	1	JC320E050A16	1						
					JC320E001A04	30	JC320E026A02	1	JC320E050A10	6						
					JC320E001A09	30	JC320E026A05	1	JC320E050A03	2						
					JC320F002A01	2	JC320E015A81	1	JC320C035A01	2						
					JC320F002A02	2	JC320E015A60	2								
					JC320F002A03	2	JC320E036A01	1								
					JC320F002A04	2	JC320E036A02	1								
					JC320F002A05	2	JC320E300A01	4								
					JC320F002A06	2	JC320E030A02	7								
					JC320F002A07	2	JC320E031A03	6								
					JC320F002A08	2	JC320E031A11	7								
					JC320F002A09	2	JC320E031A04	5								
					JC320F002A10	2	JC320E031A08	7								
					JC320F002A11	2	JC320E031A01	3								
					JC320F002A12	2	JC320E031A17	3								
					JC320F002A13	2	JC320E034A02	3								
					JC320F002A14	2	JC320E031A15	3								
					JC320F002A15	2	JC320E031A06	7								
					JC320F002A16	2	JC320E031A16	2								
					JC320F002A17	2	JC320E031A13	2								
					JC320F002A18	2	JC320E031A07	3								
					JC320F002A19	2	JC320E034A13	2								
					JC320F002A20	2	JC320E031A05	3								
					JC320F002A21	2	JC320E031A14	3								
					JC320F002A22	2	JC320E033A10	6								
					JC320F002A23	2	JC320E100A01	2								
					JC320F002A24	2	JC320E100A24	2								
					JC320F002A25	2	JC320E100A02	2								
					JC320F002A26	2	JC320E100A07	1								
					JC320F002A27	2	JC320E100A03	1								
					JC320F002A28	2	JC320E100A10	1								
					JC320F002A29	2	JC320E100A09	2								
					JC320F002A30	2	JC320E100A11	1								
					JC320E020A03	2	JC320E100A13	2								
					JC320E020A01	6	JC320E100A14	4								
					JC320E020A05	2	JC320E100A18	1								
					JC320E020A10	5	JC320E050A03	2								
					JC320E020A15	38	JC320E051A06	3								
					JC320E020A04	2	JC320E051A05	3								
					JC320E020A09	2	JC320E051A09	3								
					JC320E022A18	2	JC320E051A12	3								
					JC320E022A19	2	JC320E051A11	3								
					JC320E022A86	4	JC320E050A11	6								
					JC320E022A85	4	JC320E050A13	3								
					JC320E022A07	4	JC320E050A19	3								
					JC320E022A09	4	JC320E050A06	1								
					JC320E022A82	4	JC320E050A07	1								
					JC320E022A10	4	JC320E050A08	1								
					JC320E022A01	2	JC320E051A02	7								
					JC320E022A02	2	JC320E051A01	3								
					JC320E024A09	6	JC320E051A03	3								
					JC320E024A05	6	JC320E050A02	3								
					JC320E024A03	4	JC320E050A09	3								

© J&C AERO EEU LTD. OWN THE COPYRIGHT OF THIS DRAWING AND IT SHALL NOT BE REPRODUCED BY ANY OTHER WITHOUT THE PRIOR WRITTEN PERMISSION

11. KIT IDENTIFICATION

AC EFF.	KIT P/N	KIT DESCRIPTION	TYPE	MATERIAL COMBINATION	ITEM	QTY.	ITEM	QTY.	ITEM	QTY.	ITEM	QTY.	ITEM	QTY.	ITEM	QTY.
02388	HES113JCAERO2099-102	PLACARD KIT (A320) This kit contains AC interior placards.	PLACARD	E F	JC320E001A01	30	JC320E004A21	1	JC320E022A03	4	JC320E050A07	1				
					JC320E001A07	30	JC320E004A22	1	JC320E022A09	4	JC320E050A08	1				
					JC320E001A04	30	JC320E004A23	1	JC320E024A09	6	JC320E051A02	7				
					JC320E001A09	30	JC320E004A24	1	JC320E024A05	6	JC320E051A01	3				
					JC320F002A01	2	JC320E004A25	1	JC320E024A03	4	JC320E051A03	2				
					JC320F002A02	2	JC320E004A26	1	JC320E024A02	4	JC320E050A03	2				
					JC320F002A03	2	JC320E004A27	1	JC320E024A03	4	JC320E050A02	3				
					JC320F002A04	2	JC320E004A28	1	JC320E024A01	4	JC320E050A09	3				
					JC320F002A05	2	JC320E004A29	1	JC320E026A02	1	JC320E050A17	2				
					JC320F002A06	2	JC320E004A30	1	JC320E013A01	6	JC320E050A16	1				
					JC320F002A07	2	JC320E005A01	1	JC320E015A60	2	JC320E050A10	6				
					JC320F002A08	2	JC320E005A02	1	JC320E015A81	4						
					JC320F002A09	2	JC320E005A03	1	JC320E300A01	4						
					JC320F002A10	2	JC320E005A04	1	JC320E031A08	6						
					JC320F002A11	2	JC320E005A05	1	JC320E031A03	4						
					JC320F002A12	2	JC320E005A06	1	JC320E031A04	3						
					JC320F002A13	2	JC320E005A07	1	JC320E030A04	3						
					JC320F002A14	2	JC320E005A08	1	JC320E031A01	3						
					JC320F002A15	2	JC320E005A09	1	JC320E031A05	3						
					JC320F002A16	2	JC320E005A10	1	JC320E031A13	2						
					JC320F002A17	2	JC320E005A11	1	JC320E031A15	3						
					JC320F002A18	2	JC320E005A12	1	JC320E031A17	2						
					JC320F002A19	2	JC320E005A13	1	JC320E034A02	3						
					JC320F002A20	2	JC320E005A14	1	JC320E031A14	3						
					JC320F002A21	2	JC320E005A15	1	JC320E031A06	3						
					JC320F002A22	2	JC320E005A16	1	JC320E030A02	3						
					JC320F002A23	2	JC320E005A17	1	JC320E031A02	3						
					JC320F002A24	2	JC320E005A18	1	JC320E033A10	4						
					JC320F002A25	2	JC320E005A19	1	JC320E031A11	5						
					JC320F002A26	2	JC320E005A20	1	JC320E031A07	2						
					JC320F002A27	2	JC320E005A21	1	JC320E034A13	3						
					JC320F002A28	2	JC320E005A22	1	JC320E100A01	2						
					JC320F002A29	2	JC320E005A23	1	JC320E100A24	2						
					JC320F002A30	2	JC320E005A24	1	JC320E100A02	2						
					JC320E004A01	1	JC320E005A25	1	JC320E100A07	1						
					JC320E004A02	1	JC320E005A26	1	JC320E100A03	1						
					JC320E004A03	1	JC320E005A27	1	JC320E100A10	1						
					JC320E004A04	1	JC320E005A28	1	JC320E100A09	2						
					JC320E004A05	1	JC320E005A29	1	JC320E100A11	1						
					JC320E004A06	1	JC320E005A30	1	JC320E100A13	2						
					JC320E004A07	1	JC320E020A03	1	JC320E100A14	2						
					JC320E004A08	1	JC320E020A01	8	JC320E100A14	4						
					JC320E004A09	1	JC320E020A15	37	JC320E100A18	1						
					JC320E004A10	1	JC320E020A05	2	JC320E026A05	1						
					JC320E004A11	1	JC320E020A09	2	JC320E051A09	3						
					JC320E004A12	1	JC320E020A10	8	JC320E051A05	3						
					JC320E004A13	1	JC320E022A11	4	JC320E051A06	3						
					JC320E004A14	1	JC320E022A12	4	JC320E051A11	3						
					JC320E004A15	1	JC320E022A18	2	JC320E051A12	3						
					JC320E004A16	1	JC320E022A19	2	JC320C035A01	3						
					JC320E004A17	1	JC320E022A82	4	JC320E050A11	6						
					JC320E004A18	1	JC320E022A10	4	JC320E050A13	3						
					JC320E004A19	1	JC320E022A04	4	JC320E050A19	3						
					JC320E004A20	1	JC320E022A07	4	JC320E050A06	1						

© J&C AERO EEU LTD. OWN THE COPYRIGHT OF THIS DRAWING AND IT SHALL NOT BE REPRODUCED BY ANY OTHER WITHOUT THE PRIOR WRITTEN PERMISSION

11. KIT IDENTIFICATION

AC EFF.	KIT P/N	KIT DESCRIPTION	TYPE	MATERIAL COMBINATION	ITEM	QTY.	ITEM	QTY.	ITEM	QTY.	ITEM	QTY.	ITEM	QTY.	ITEM	QTY.
03275	HES113JCAERO2099-103	PLACARD KIT (A320) This kit contains AC interior placards.	PLACARD	E	JC320E012A01	1	JC320E014A25	1	JC320E033A10	4						
					JC320E012A02	1	JC320E014A26	1	JC320E031A11	4						
					JC320E012A03	1	JC320E014A27	1	JC320E031A08	5						
					JC320E012A04	1	JC320E014A28	1	JC320E031A06	4						
					JC320E012A05	1	JC320E014A29	1	JC320E031A02	4						
					JC320E012A06	1	JC320E014A30	1	JC320E030A02	3						
					JC320E012A07	1	JC320E020A03	1	JC320E031A13	2						
					JC320E012A08	1	JC320E020A01	8	JC320E034A13	2						
					JC320E012A09	1	JC320E020A10	4	JC320E031A15	3						
					JC320E012A10	1	JC320E020A15	38	JC320E031A05	3						
					JC320E012A11	1	JC320E020A04	1	JC320E031A17	2						
					JC320E012A12	1	JC320E020A05	2	JC320E100A01	2						
					JC320E012A13	1	JC320E020A09	2	JC320E100A24	2						
					JC320E012A14	1	JC320E020A02	1	JC320E100A02	2						
					JC320E012A15	1	JC320E020A06	1	JC320E100A07	1						
					JC320E012A16	1	JC320E020A03	2	JC320E100A03	1						
					JC320E012A17	1	JC320E020A23	1	JC320E100A10	1						
					JC320E012A18	1	JC320E022A18	2	JC320E100A09	2						
					JC320E012A19	1	JC320E022A19	2	JC320E100A11	1						
					JC320E012A20	1	JC320E022A11	4	JC320E100A13	2						
					JC320E012A21	1	JC320E022A12	4	JC320E100A14	3						
					JC320E012A22	1	JC320E022A13	4	JC320E100A18	1						
					JC320E012A23	1	JC320E022A15	8	JC320E050A03	2						
					JC320E012A24	1	JC320E022A10	4	JC320E051A09	3						
					JC320E012A25	1	JC320E022A06	4	JC320E051A05	3						
					JC320E012A26	1	JC320E022A04	4	JC320E051A11	3						
					JC320E012A27	1	JC320E022A03	4	JC320E051A06	3						
					JC320E012A28	1	JC320E022A15	8	JC320E051A12	3						
					JC320E012A29	1	JC320E022A10	4	JC320E050A11	6						
					JC320E012A30	1	JC320E022A82	4	JC320E050A19	3						
					JC320E014A01	1	JC320E022A09	4	JC320E050A13	3						
					JC320E014A02	1	JC320E024A03	4	JC320E050A06	1						
					JC320E014A03	1	JC320E037A04	1	JC320E050A07	1						
					JC320E014A04	1	JC320E037A05	1	JC320E050A08	1						
					JC320E014A05	1	JC320E024A09	6	JC320E051A02	7						
					JC320E014A06	1	JC320E024A05	6	JC320E051A01	3						
					JC320E014A07	1	JC320E024A01	4	JC320E051A03	2						
					JC320E014A08	1	JC320E024A02	4	JC320E050A03	2						
					JC320E014A09	1	JC320E022A26	4	JC320E050A17	2						
					JC320E014A10	1	JC320E013A01	6	JC320E050A16	1						
					JC320E014A11	1	JC320E026A05	1	JC320E050A10	6						
					JC320E014A12	1	JC320E036A01	1	JC320E050A02	3						
					JC320E014A13	1	JC320E036A02	1	JC320E050A09	3						
					JC320E014A14	1	JC320E033A02	1								
					JC320E014A15	1	JC320E026A02	1								
					JC320E014A16	1	JC320E015A81	4								
					JC320E014A17	1	JC320E031A04	4								
					JC320E014A18	1	JC320E030A04	2								
					JC320E014A19	1	JC320E031A07	3								
					JC320E014A20	1	JC320E031A01	3								
					JC320E014A21	1	JC320E031A14	3								
					JC320E014A22	1	JC320E037A01	3								
					JC320E014A23	1	JC320E034A02	3								
					JC320E014A24	1	JC320E031A03	4								

J&C AERO EEU
EASA APPROVAL NO: EASA.21J.580
WWW.THISISDOA.EU
INFO@THISISDOA.EU
PHONE: +353 15 269768

AIRCRAFT: SEE TABLE 1
TOLERANCES: OVERALL PLACARD DIMENSIONS ±1MM; RADIUS ±1MM; LETTERING/GRAPHIC DIMENSIONS +1.0/-0.5 MM; INSTALLATION ±4MM; ANGULAR ±5°.
DRAWN BY: SEE JCAERO/ECN/2099
MSN: SEE TABLE 1
REGISTRATION: -
SCALE: NTS
SIZE: A2
ALL DIMENSIONS ARE MILLIMETERS
THIRD ANGLE PROJECTION
CHECKED BY: SEE JCAERO/ECN/2099
TITLE: INTERIOR PLACARDS ILLUSTRATED CATALOGUE
DRAWING NUMBER: HES113JCAERO2099

REV. C

© J&C AERO EEU LTD. OWN THE COPYRIGHT OF THIS DRAWING AND IT SHALL NOT BE REPRODUCED BY ANY OTHER WITHOUT THE PRIOR WRITTEN PERMISSION

11. KIT IDENTIFICATION

AC EFF.	KIT P/N	KIT DESCRIPTION	TYPE	MATERIAL COMBINATION	ITEM	QTY.	ITEM	QTY.	ITEM	QTY.	ITEM	QTY.	ITEM	QTY.	ITEM	QTY.
03596	HES113JCAERO2099-104	PLACARD KIT (A320) This kit contains AC interior placards.	PLACARD	E F	JC320E012A01	1	JC320E014A24	1	JC320E031A02	2						
					JC320E012A02	1	JC320E014A25	1	JC320E031A03	1						
					JC320E012A03	1	JC320E014A26	1	JC320E031A04	1						
					JC320E012A04	1	JC320E014A27	1	JC320E031A05	2						
					JC320E012A05	1	JC320E014A57	1	JC320E031A06	3						
					JC320E012A06	1	JC320E014A58	1	JC320E031A07	1						
					JC320E012A07	1	JC320E012A57	1	JC320E031A08	5						
					JC320E012A08	1	JC320E012A58	1	JC320E031A10	1						
					JC320E012A09	1	JC320E012A59	1	JC320E031A11	5						
					JC320E012A10	1	JC320E020A01	4	JC320E031A13	1						
					JC320E012A11	1	JC320E020A03	1	JC320E031A14	3						
					JC320E012A12	1	JC320E020A04	1	JC320E031A15	3						
					JC320E012A13	1	JC320E020A05	2	JC320E031A17	2						
					JC320E012A14	1	JC320E020A09	2	JC320E032A02	15						
					JC320E012A15	1	JC320E020A10	3	JC320E033A10	5						
					JC320E012A16	1	JC320E020A11	2	JC320E033A02	1						
					JC320E012A17	1	JC320E020A15	38	JC320E034A01	2						
					JC320E012A18	1	JC320E020A30	1	JC320E034A02	3						
					JC320E012A19	1	JC320E020A45	1	JC320E034A13	1						
					JC320E012A20	1	JC320E022A01	2	JC320E036A01	1						
					JC320E012A21	1	JC320E022A02	2	JC320E036A02	1						
					JC320E012A22	1	JC320E022A06	4	JC320E037A01	2						
					JC320E012A23	1	JC320E022A07	4	JC320E031A25	2						
					JC320E012A24	1	JC320E022A09	4	JC320E030A23	1						
					JC320E012A25	1	JC320E022A10	4	JC320E100A04	4						
					JC320E012A26	1	JC320E022A11	4	JC320E050A01	3						
					JC320E012A27	1	JC320E022A12	4	JC320E050A02	3						
					JC320E012A42	1	JC320E022A13	4	JC320E050A03	2						
					JC320E012A43	1	JC320E022A14	8	JC320E050A06	1						
					JC320E012A44	1	JC320E022A15	8	JC320E050A07	1						
					JC320E012A45	1	JC320E022A16	2	JC320E050A08	1						
					JC320E012A46	1	JC320E022A17	64	JC320E050A09	3						
					JC320E012A47	1	JC320E022A18	2	JC320E050A10	6						
					JC320E014A03	1	JC320E022A19	2	JC320E050A11	6						
					JC320E014A04	1	JC320E022A26	4	JC320E050A13	3						
					JC320E014A05	1	JC320E022A30	4	JC320E050A14	3						
					JC320E014A06	1	JC320E022A82	4	JC320E050A16	1						
					JC320E014A07	1	JC320E024A01	4	JC320E050A17	2						
					JC320E014A08	1	JC320E024A02	4	JC320E050A19	3						
					JC320E014A09	1	JC320E024A03	4	JC320E051A01	3						
					JC320E014A10	1	JC320E024A05	6	JC320E051A02	7						
					JC320E014A11	1	JC320E024A09	6	JC320E051A03	2						
					JC320E014A12	1	JC320E020A01	8	JC320E051A05	3						
					JC320E014A13	1	JC320E037A04	1	JC320E051A06	3						
					JC320E014A14	1	JC320E037A05	1	JC320E051A09	3						
					JC320E014A15	1	JC320E013A01	8	JC320E051A10	3						
					JC320E014A16	1	JC320E015A01	6	JC320E051A11	3						
					JC320E014A17	1	JC320E015A60	2	JC320E051A12	3						
					JC320E014A18	1	JC320E015A81	4								
					JC320E014A19	1	JC320E300A01	4								
					JC320E014A20	1	JC320E030A01	2								
					JC320E014A21	1	JC320E030A02	2								
					JC320E014A22	1	JC320E030A04	1								
					JC320E014A23	1	JC320E031A01	1								

J&C AERO EEU
EASA APPROVAL NO: EASA.21J.580
WWW.THISISDOA.EU
INFO@THISISDOA.EU
PHONE: +353 15 269768

AIRCRAFT: SEE TABLE 1	TOLERANCES: OVERALL PLACARD DIMENSIONS ±1MM; RADIUS ±1MM; LETTERING/GRAPHIC DIMENSIONS +1.0/-0.5 MM; INSTALLATION ±4MM; ANGULAR ±5°			DRAWN BY: SEE JCAERO/ECN/2099
MSN: SEE TABLE 1	REGISTRATION: -	SCALE: NTS	SIZE: A2	ALL DIMENSIONS ARE MILLIMETERS THIRD ANGLE PROJECTION	CHECKED BY: SEE JCAERO/ECN/2099
TITLE: INTERIOR PLACARDS ILLUSTRATED CATALOGUE				
DRAWING NUMBER: HES113JCAERO2099			SHEET 98 OF 98	REV. C

© J&C AERO EEU LTD. OWN THE COPYRIGHT OF THIS DRAWING AND IT SHALL NOT BE REPRODUCED BY ANY OTHER WITHOUT THE PRIOR WRITTEN PERMISSION