DRAWING NUMBER: SGL113JCAERO2091

F	E	D	C	B	A	DRW REVISION	
				UPDATED	INITIAL REVISION	REVISION DSC	CHANGES
				SEE ECN	27 MAY 2022	REVISION DATE	

INTERIOR PLACARDS ILLUSTRATED CATALOGUE

TABLE OF CONTENT:

	SHEET
1. PLACARD PART NUMBER	2
2. GENERAL NOTES	2
3. MATERIAL	2
4. PLACARD COLORS	2
INTERIOR PLACARDS - 1. ENTRY AND SERVICE DOORS	5-7
INTERIOR PLACARDS - 2. OVERWING EXIT DOORS	8-9
INTERIOR PLACARDS - 3. LAVATORY LA, LD & LE	10-15
INTERIOR PLACARDS - 4. FLIGHT DECK	16-18
INTERIOR PLACARDS - 5. GALLEY	19-20
INTERIOR PLACARDS - 6. ATTENDANT STATION	21-23
INTERIOR PLACARDS - 7. OVERHEAD STOWAGE BINS	24-29
INTERIOR PLACARDS - 8. PASSENGER SEATS	30-31
INTERIOR PLACARDS - 9. PASSENGER CABIN - LOAD LIMIT	32-34

A/C TYPE: BOEING 737-800

J&C AERO EEU

EASA APPROVAL NO: EASA.21J.580

WWW.THISISDOA.EU
INFO@THISISDOA.EU
PHONE: +353 15 269768

AIRCRAFT: BOEING 737-800	TOLERANCES: ANGULAR =±5°; DECIMALS X = ±1, X.X = ±0.5, X.XX = ±0.05		DRAWN BY: SEE ECN JCAERO/ECN/2091
MSN: 34280, 34281, 28241, 30628	REGISTRATION: -	SCALE: NTS / SIZE: A2 / ALL DIMENSIONS ARE MILLIMETERS / THIRD ANGLE PROJECTION	CHECKED BY: SEE ECN JCAERO/ECN/2091
TITLE: INTERIOR PLACARDS ILLUSTRATED CATALOGUE			
DRAWING NUMBER: SGL113JCAERO2091		SHEET 1 OF 34	REV. B

© J&C AERO EEU LTD. OWN THE COPYRIGHT OF THIS DRAWING AND IT SHALL NOT BE REPRODUCED BY ANY OTHER WITHOUT THE PRIOR WRITTEN PERMISSION

DOC/302 ISSUE 1.0

1. INTRODUCTION

1.1 THIS STANDARD INTERIOR PLACARD ILLUSTRATED CATALOGUE IS VALID FOR THE BOEING 737-800 AIRCRAFT.

1.2 THE INTERIOR PLACARDS INTRODUCED IN THIS INTERIOR PLACARD ILLUSTRATED CATALOGUE ARE ALTERNATIVE OF THE TC HOLDER INTERIOR PLACARDS.

1.3 THIS INTERIOR PLACARD ILLUSTRATED CATALOGUE SHOWS TYPICAL LOCATION OF INTERIOR PLACARDS, HOWEVER THIS DRAWING DOES NOT APPROVE INTERIOR PLACARD INSTALLATION IN SPECIFIED LOCATIONS. THE INTRODUCED INTERIOR PLACARDS MUST BE INSTALLED FOR EACH AIRCRAFT IN ACCORDANCE WITH CUSTOMIZED DOCUMENTS:

- AMM;
- IPC;
- TC HOLDER DWG;
- CMM;
- SB;
- EASA PART 21J ORGANISATION APPROVED MODIFICATION;
- LATEST APPROVED EMERGENCY EQUIPMENT LAYOUT;
- LATEST APPROVED PASSENGER ACCOMMODATION LAYOUT (LOPA).

1.4 DRAWING IS INTENDED TO BE A GUIDELINE FOR ALTERNATIVE INTERIOR PLACARDS PART NUMBER WITH REFERENCE TO TC HOLDER APPROVED PLACARDS PART NUMBER AND TYPICAL DESIGNATION ONLY.

2. GENERAL NOTES

2.1 INSTALLATION OF INTERIOR PLACARDS ONLY IN ACCORDANCE WITH BOEING 737-800 CUSTOMIZED DOCUMENTS: AMM 20-10-14 AND AIPC 11-00-00, BOEING ENGINEERING DRAWINGS, SERVICE BULLETINS, EASA PART 21J ORGANISATION APPROVED MODIFICATION , UNLESS OTHERWISE STATED.

2.2 INSPECT & CHECK PLACARDS BEFORE INSTALLATION.

2.3 INSTALL EMERGENCY EQUIPMENT PLACARDS ADJACENT TO EACH PIECE OF EMERGENCY EQUIPMENT REFER TO AFFECTED BOEING 737-800 AIPC AND LATEST APPROVED EMERGENCY EQUIPMENT LAYOUT.

2.4 INSTALL PLACARDS FROM FRONT TO REAR. INSTALL ON CENTERLINE PSU CALL BUTTON WHEN POSSIBLE. IF PLACARD CANNOT BE MOUNTED BECAUSE OF INTERFERENCE OR POOR VISIBILITY. IT IS ACCEPTABLE TO MOUNT AS NEAR AS POSSIBLE OVER THE PASSENGER SEAT SO THAT VISUAL IDENTIFICATION WILL RELATE SEAT AND ROW POSITION.

2.5 PERFORM A DIMENSIONAL CHECK BY EVALUATING SIZES OF EACH ITEM USING INDICATED DIMENSIONS IN DRAWING NO. SGL113JCAERO2091.

2.6 READ AND RECORD THE DIMENSIONS FOR THE ATTRIBUTE(S) MEASURED USING THE SAME NUMBER OF SIGNIFICANT DIGITS SPECIFIED BY THE DRAWING, STANDARD, OR SPECIFICATION AS A MINIMUM OR MAXIMUM LIMITING VALUE.

2.7 QUANTITY PER AIRCRAFT MAY VARY DUE TO AIRCRAFT CONFIGURATION.

2.8 THE PRODUCTION OF DECALS IS DEDICATED TO PART 21 SUBPART G(POA ORGANISATION) WITH THE RELEVANT SCOPE OF APPROVAL.

2.9 UNLESS OTHERWISE STATED, THESE DIMENSIONS AND TOLERANCES ARE USED:

- ALL DIMENSIONS ARE IN MILIMETERS;
- OVERALL PLACARD DIMENSIONS ±1MM;
- RADIUS ±1MM;
- LETTERING/GRAPHIC DIMENSIONS +1,0/-0,5 MM;
- INSTALLATION ±4MM.

2.10 THE PLACARD PARAMETERS SHOWN WITHIN THIS DRAWING ARE NOT CUSTOMISABLE. PARAMETERS:

- PHYSICAL SIZE AND SHAPE;
- THE LETTER FONT TYPE AND SIZE, GRAPHIC SIZE, COLOR AND BACKGROUND COLOR;
- MATERIALS AND MATERIALS COMBINATION.

2.11 PLACARD PRINTING PROCESS INTRODUCED IN THIS DRAWING IS NOT CUSTOMIZABLE, ONLY SPECIFIED PRINTING METHOD AND INKS CAN BE USED. FOR PRINTING METHOD REFER TO PARAGRAPH “3. PLACARD MANUFACTURING”.

2.12 PLACARDS MUST BE EPA PART MARKED AS DEFINED IN EASA PART 21 IAW 21.A.804(a).

2.13 THE PLACARD MATERIAL MUST COMPLY WITH THE REQUIREMENTS OF CS 25.853(a) APPENDIX F PART 1(a)(1)(ii) & (b)(4).

2.14 FOR MATERIAL USED TO MANUFACTURE PLACARDS REFER TO PARAGRAPH “3. PLACARD MANUFACTURING”.

2.15 FOR PLACARD COLOR DETAILS REFER TO PARAGRAPH “4. PLACARD COLORS”.

2.16 FOR LETTERING FONT TYPE REFER TO PARAGRAPH “5. LETTERING”.

2.17 FOR PLACARD PART NUMBER BUILD-UP REFER TO PARAGRAPH “6. PART NUMBER AND EPA MARKING”.

2.18 FOR PLACARD TYPICAL INSTALLATION INSTRUCTIONS REFER TO PARAGRAPH “7. PLACARD INSTALLATION”.

© J&C AERO EEU LTD. OWN THE COPYRIGHT OF THIS DRAWING AND IT SHALL NOT BE REPRODUCED BY ANY OTHER WITHOUT THE PRIOR WRITTEN PERMISSION

3.PLACARD MANUFACTURING

3.1 THE INTRODUCED PLACARD MATERIAL AND GRAPHIC APPLICATION METHOD ARE NOT CUSTOMIZABLE. ONLY MATERIALS AND GRAPHIC APPLICATION METHOD INTRODUCED IN SUBPARAGRAPH "3.4 MATERIAL COMBINATION TABLE" MUST BE USED TO MANUFACTURE PLACARDS.

3.2 MATERIAL COMBINATION TABLE:

COMBINATION	BASE MATERIAL	INK	ADHESIVE TYPE	BUILD-UP	REMARKS
E	MAKROFOL FR 7-2 0,25MM TH	HP LATEX	3M ADHESIVE 468MP		LETTERING: DIGITAL PRINTED

4. PLACARD COLORS:

	COLOR		CMYK CODE
4.1	FIRE RED		0, 100, 100, 0
4.2	WHITE		0, 0, 0, 0
4.3	GREY		0, 2, 2, 2
4.4	GREY 20%		0, 0, 0, 20
4.5	GREY 40%		0, 0, 0, 40
4.6	GREY 80%		0, 0, 0, 80
4.7	BLACK		0, 0, 0, 100
4.8	YELLOW		0, 0, 100, 0
4.9	DEEP YELLOW		0, 20, 100, 0
4.10	LIGHT ORANGE		0, 40, 80, 0
4.11	ORANGE		0, 60, 100, 0
4.12	GREEN		100, 0, 100, 0
4.13	BLUE #1		58, 4, 10, 0
4.14	BLUE #2		76, 15, 1, 0
4.15	BLUE #3		100, 60, 0, 0
4.16	BLUE #4		75, 47, 0, 0
4.17	BLUE #5		86, 80, 1, 0
4.18	LIGHT BROWN		0, 20, 60, 20
4.19	BROWN		0, 20, 40, 40

5. LETTERING

5.1 LETTER FONT TYPE, STYLE, SIZE AND COLOR ARE NOT CUSTOMIZABLE.

5.2 THE FONT TYPE USED FOR LETTERING ON INTERIOR PLACARDS IS „HELVETICA NEUE CYR BOLD".

6. PART NUMBER AND "EPA" MARKING

6.1 PART NUMBER BUILD UP: JC 737 A 001 A 01

- 01 — ITEM NUMBER
- A — LANGUAGE
- 001 — GROUP NUMBER
- A — MATERIAL COMBINATION
- 737 — DRAWING NUMBER
- JC — J&C AEROSPACE DESIGN AND CERTIFICATION SERVICES EEU LTD

6.2 PLACARDS MUST BE EPA PART MARKED AS DEFINED IN EASA PART 21 IAW 21A.804(a) MARKING:

EPA JC737A001A1

- JC737A001A1 — ITEM PART NUMBER
- EPA — EUROPEAN PART APPROVAL

6.3 PART NUMBER FONT TYPE: ARIAL NORMAL;

6.4 PART NUMBER FONT SIZE: AT LEAST 1,5 mm;

6.5 PART NUMBER FONT COLOR: WHITE COLOR ON A DARK COLOR BACKGROUND, IN OTHER CASES P/N IS BLACK.

© J&C AERO EEU LTD. OWN THE COPYRIGHT OF THIS DRAWING AND IT SHALL NOT BE REPRODUCED BY ANY OTHER WITHOUT THE PRIOR WRITTEN PERMISSION

7. PLACARD INSTALLATION

7.1 DAMAGED OR DEGRADED PLACARDS TO BE REMOVED IAW AMM 20-10-14.

7.2 NEW ALTERNATIVE PLACARDS TO BE INSTALLED IAW AMM 20-10-14.

7.3 THIS INTERIOR PLACARD CATALOGUE DOES NOT INTRODUCE OR APPROVE INTERIOR PLACARD INSTALLATION IN SPECIFIED LOCATION, REFER TO SUB-PARAGRAPH 7.4.

7.4 ALL REPLACEMENT PLACARDS TO BE INSTALLED IN LOCATION FOR EACH AIRCRAFT ONLY IN ACCORDANCE WITH CUSTOMIZED RELEVANT AIRCRAFT DOCUMENTS:

- IPC;
- AMM;
- TC HOLDER DWG;
- CMM;
- SB;
- EASA PART 21J ORGANISATION APPROVED MODIFICATION;
- LATEST APPROVED EMERGENCY EQUIPMENT LAYOUT;
- LATEST APPROVED PASSENGER ACCOMMODATION LAYOUT (LOPA).

7.5 GENERAL INSTALLATION GUIDANCE, REF TO FIGURES 1.0 AND 2.0 BELOW:

A) ALL PLACARDS TO BE HORIZONTALLY AND VERTICALLY ALIGNED IF NOT SPECIFIED OTHERWISE;
B) NATURALLY REFERENCE EDGES, LINES OR POINTS HAVE TO BE OBSERVED;
C) DO NOT ATTACHE PLACARD AROUND A CORNER UNLESS OTHERWISE STATED;
D) AT NON-DIMENSIONED DISTANCES OF RADIUS- IT IS ACCEPTABLE TO START PLACARD APPLICATION FROM RADIUS TANGENT POINT;
E) PLACARD TO BE INSTALLED MIN 20 MM FROM EDGE OR CORNER IF NOT OTHERWISE SPECIFIED.

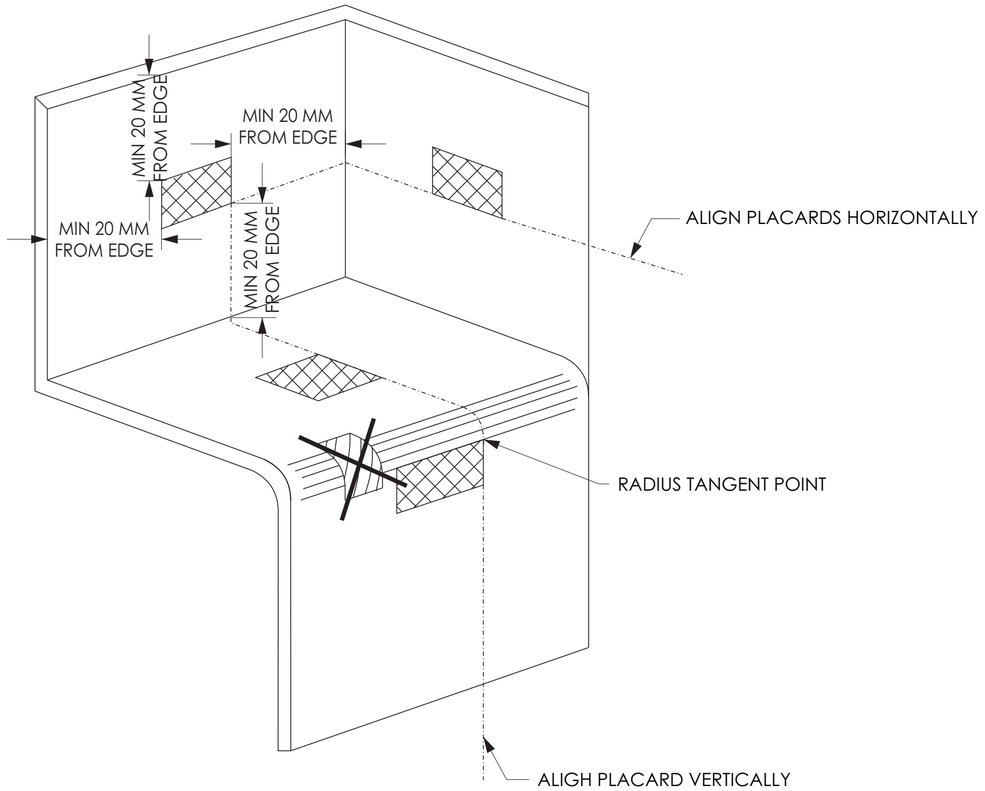

FIGURE 1.0
MARKINGS INSTALLATION GUIDELINES

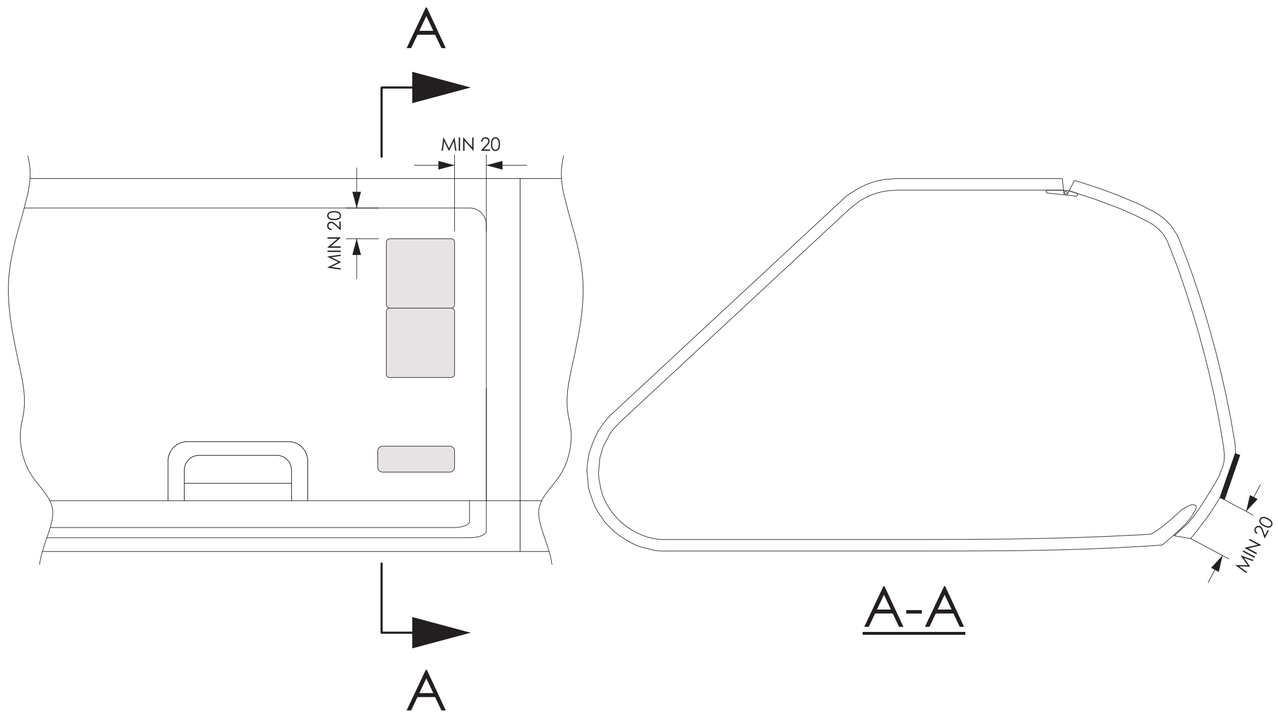

FIGURE 2.0
OVERHEAD STORAGE COMPARTMENT MARKINGS INSTALLATION GUIDELINES

© J&C AERO EEU LTD. OWN THE COPYRIGHT OF THIS DRAWING AND IT SHALL NOT BE REPRODUCED BY ANY OTHER WITHOUT THE PRIOR WRITTEN PERMISSION

DRAWING NUMBER: SGL113JCAERO2091

INTERIOR PLACARDS - 1. ENTRY AND SERVICE DOOR

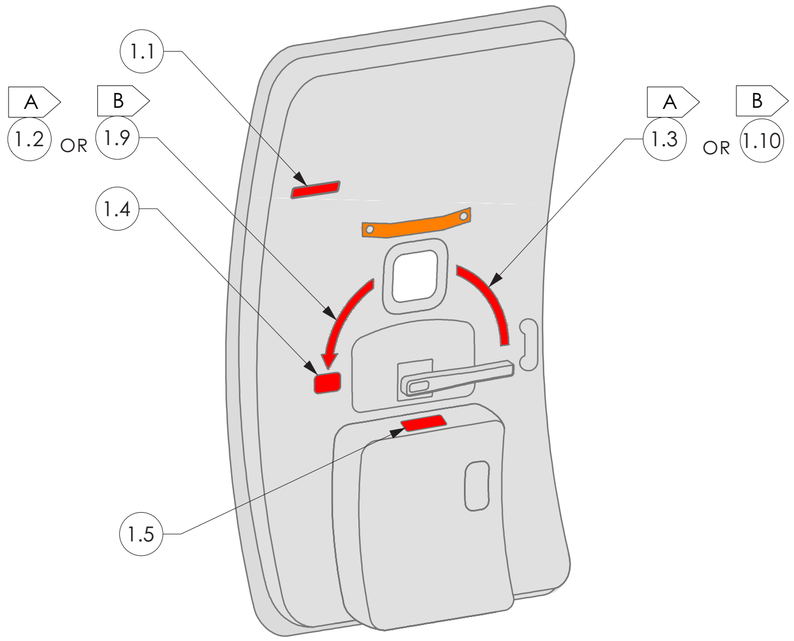

FWD & AFT ENTRY DOORS

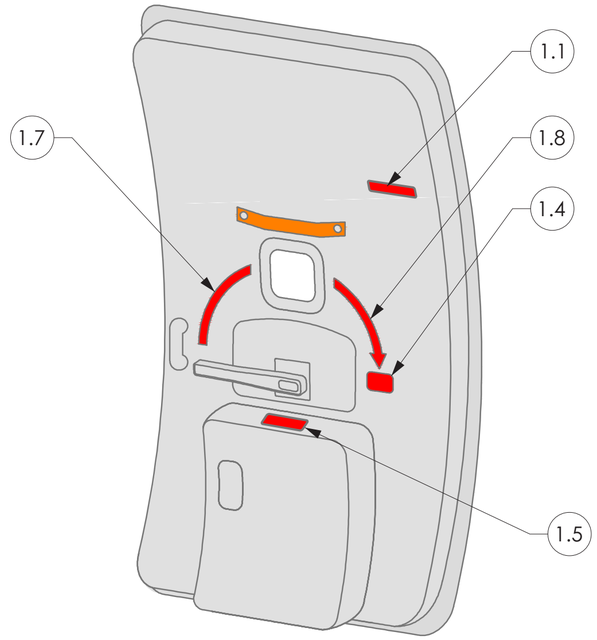

FWD & AFT SERVICE DOORS

DWG SH NOTES:
- A APPLICABLE FOR FWD L/H ENTRY DOOR.
- B APPLICABLE FOR AFT L/H ENTRY DOOR.

J&C AERO EEU
EASA APPROVAL NO: EASA.21J.580

WWW.THISISDOA.EU
INFO@THISISDOA.EU
PHONE: +353 15 269768

AIRCRAFT: BOEING 737-800

TOLERANCES: ANGULAR ±±5° DECIMALS X = ±1, X.X = ±0.5, X.XX = ±0.05

DRAWN BY: SEE ECN JCAERO/ECN/2091

MSN: 34280, 34281, 28241, 30628

REGISTRATION: -

SCALE: NTS SIZE: A2 ALL DIMENSIONS ARE MILLIMETERS THIRD ANGLE PROJECTION

CHECKED BY: SEE ECN JCAERO/ECN/2091

TITLE: INTERIOR PLACARDS ILLUSTRATED CATALOGUE

DRAWING NUMBER: SGL113JCAERO2091

SHEET 5 OF 34

REV. B

© J&C AERO EEU LTD. OWN THE COPYRIGHT OF THIS DRAWING AND IT SHALL NOT BE REPRODUCED BY ANY OTHER WITHOUT THE PRIOR WRITTEN PERMISSION

DOC/302 ISSUE 1.0

DRAWING NUMBER: SGL113JCAERO2091

INTERIOR PLACARDS - 1. ENTRY AND SERVICE DOOR

ITEM	PART NUMBER (OEM PART NUMBER)	PLACARD CONTENT	DESCRIPTION	SIZE (WXH); LETTERS HEIGHT	COLOR INDEX	QUANTITY	NOTES
1.1	JC737E022A40 (BAC29PPS36224)	FLAG MUST BE ACROSS WINDOW WHEN SLIDE IS		95X30 5	4.1 4.3	4	
1.2	JC737E022A15 (BAC29PPS43417)	DOOR ARROW		178X365 ARROW WIDTH 25	4.1	1	
1.3	JC737E022A16 (BAC29PPS35851)	DOOR ARROW		265X374 ARROW WIDTH 25	4.1	1	
1.4	JC737E022A41 (BAC29PPS39957)	OPEN		105X36 26	4.1 4.3	4	
1.5	JC737E022A42 (BAC29PPS46361)	SLIDE INSIDE		130X45 5	4.1 4.3	4	

J&C AERO EEU
EASA APPROVAL NO: EASA.21J.580

WWW.THISISDOA.EU
INFO@THISISDOA.EU
PHONE: +353 15 269768

AIRCRAFT: BOEING 737-800
MSN: 34280, 34281, 28241, 30628
REGISTRATION: -
TOLERANCES: ANGULAR ±5°; DECIMALS X = ±1, X.X = ±0.5, X.XX = ±0.05
SCALE: NTS
SIZE: A2
ALL DIMENSIONS ARE MILLIMETERS
THIRD ANGLE PROJECTION
DRAWN BY: SEE ECN JCAERO/ECN/2091
CHECKED BY: SEE ECN JCAERO/ECN/2091
TITLE: INTERIOR PLACARDS ILLUSTRATED CATALOGUE
DRAWING NUMBER: SGL113JCAERO2091
SHEET 6 OF 34
REV. B

© J&C AERO EEU LTD. OWN THE COPYRIGHT OF THIS DRAWING AND IT SHALL NOT BE REPRODUCED BY ANY OTHER WITHOUT THE PRIOR WRITTEN PERMISSION

DOC/302 ISSUE 1.0

INTERIOR PLACARDS - 1. ENTRY AND SERVICE DOOR

ITEM	PART NUMBER (OEM PART NUMBER)	PLACARD CONTENT	DESCRIPTION	SIZE (WXH); LETTERS HEIGHT	COLOR INDEX	QUANTITY	NOTE
1.6	RESERVED						
1.7	JC737E022A21 (BAC29PPS35855)	DOOR ARROW		96X228 ARROW WIDTH 25	4.1	2	
1.8	JC737E022A22 (BAC29PPS35854)	DOOR ARROW		215X277 ARROW WIDTH 25	4.1	2	
1.9	JC737E022A23 (BAC29PPS43418)	DOOR ARROW		215X277 ARROW WIDTH 25	4.1	2	
1.10	JC737E022A24 (BAC29PPS35853)	DOOR ARROW		96X228 ARROW WIDTH 25	4.1	2	

© J&C AERO EEU LTD. OWN THE COPYRIGHT OF THIS DRAWING AND IT SHALL NOT BE REPRODUCED BY ANY OTHER WITHOUT THE PRIOR WRITTEN PERMISSION

DRAWING NUMBER: SGL113JCAERO2091

INTERIOR PLACARDS - 2. OVERWING EXIT DOORS

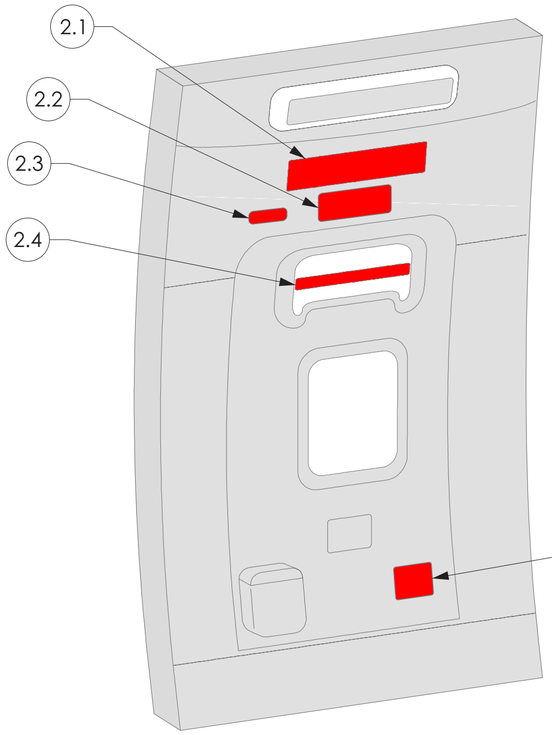

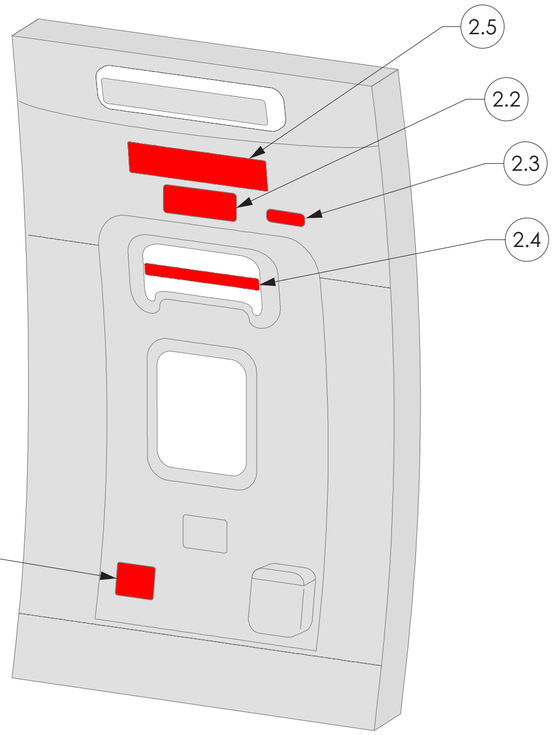

2.6

L/H EMERGENCY OVERWING EXIT DOORS

R/H EMERGENCY OVERWING EXIT DOORS

J&C AERO EEU
EASA APPROVAL NO: EASA.21J.580

WWW.THISISDOA.EU
INFO@THISISDOA.EU
PHONE: +353 15 269768

AIRCRAFT: BOEING 737-800

TOLERANCES
ANGULAR ±±5°
DECIMALS X = ±1
X.X = ±0.5
X.XX = ±0.05

DRAWN BY: SEE ECN JCAERO/ECN/2091

MSN: 34280, 34281, 28241, 30628

REGISTRATION: -

SCALE: NTS
SIZE: A2
ALL DIMENSIONS ARE MILLIMETERS
THIRD ANGLE PROJECTION

CHECKED BY: SEE ECN JCAERO/ECN/2091

TITLE: INTERIOR PLACARDS ILLUSTRATED CATALOGUE

DRAWING NUMBER: SGL113JCAERO2091

SHEET 8 OF 34

REV. B

© J&C AERO EEU LTD. OWN THE COPYRIGHT OF THIS DRAWING AND IT SHALL NOT BE REPRODUCED BY ANY OTHER WITHOUT THE PRIOR WRITTEN PERMISSION

DOC/302
ISSUE 1.0

DRAWING NUMBER: SGL113JCAERO2091

INTERIOR PLACARDS - 2. OVERWING EXIT DOORS

ITEM	PART NUMBER (OEM PART NUMBER)	PLACARD CONTENT	DESCRIPTION	SIZE (WXH); LETTERS HEIGHT	COLOR INDEX	QUANTITY	NOTE
2.1	JC737E024A01 (BAC29PPS35848)	L/H EMERGENCY EXIT OVERWING		293X63	4.1 4.4 4.2 4.6 4.3 4.8	2	
2.2	JC737E024A30 (BAC29PPS30384)	EMERGENCY USE ONLY		135X18 8	4.1 4.3	4	
2.3	JC737E024A24 (N/A)	LIFE LINE		80X20 10	4.3 4.7	4	
2.4	ONLY OEM PLACARD TO BE USED (BAC29PPS34937)	PULL DOWN		-	4.1 4.7	4	PHOTOLUMINESCENT OEM PLACARD P/N: BAC29PPS34937
2.5	JC737E024A02 (BAC29PPS35847)	R/H EMERGENCY EXIT OVERWING		293 X 63	4.1 4.4 4.2 4.6 4.3 4.8	2	
2.6	JC737E024A31 (BAC29PPS36217)	NO STOWAGE		100X100 6	4.1 4.3 4.7	4	

J&C AERO EEU
EASA APPROVAL NO: EASA.21J.580

WWW.THISISDOA.EU
INFO@THISISDOA.EU
PHONE: +353 15 269768

AIRCRAFT: BOEING 737-800
MSN: 34280, 34281, 28241, 30628
REGISTRATION: -
TOLERANCES: ANGULAR ±5°; DECIMALS X = ±1, X.X = ±0.5, X.XX = ±0.05
SCALE: NTS
SIZE: A2
ALL DIMENSIONS ARE MILLIMETERS
THIRD ANGLE PROJECTION
DRAWN BY: SEE ECN JCAERO/ECN/2091
CHECKED BY: SEE ECN JCAERO/ECN/2091
TITLE: INTERIOR PLACARDS ILLUSTRATED CATALOGUE
DRAWING NUMBER: SGL113JCAERO2091
SHEET 9 OF 34
REV. B

© J&C AERO EEU LTD. OWN THE COPYRIGHT OF THIS DRAWING AND IT SHALL NOT BE REPRODUCED BY ANY OTHER WITHOUT THE PRIOR WRITTEN PERMISSION

DOC/302 ISSUE 1.0

DRAWING NUMBER: SGL113JCAERO2091

INTERIOR PLACARDS - 3. LAVATORY LA (L/H FWD), LAVATORY LD (L/H AFT) & LAVATORY LE (R/H AFT)

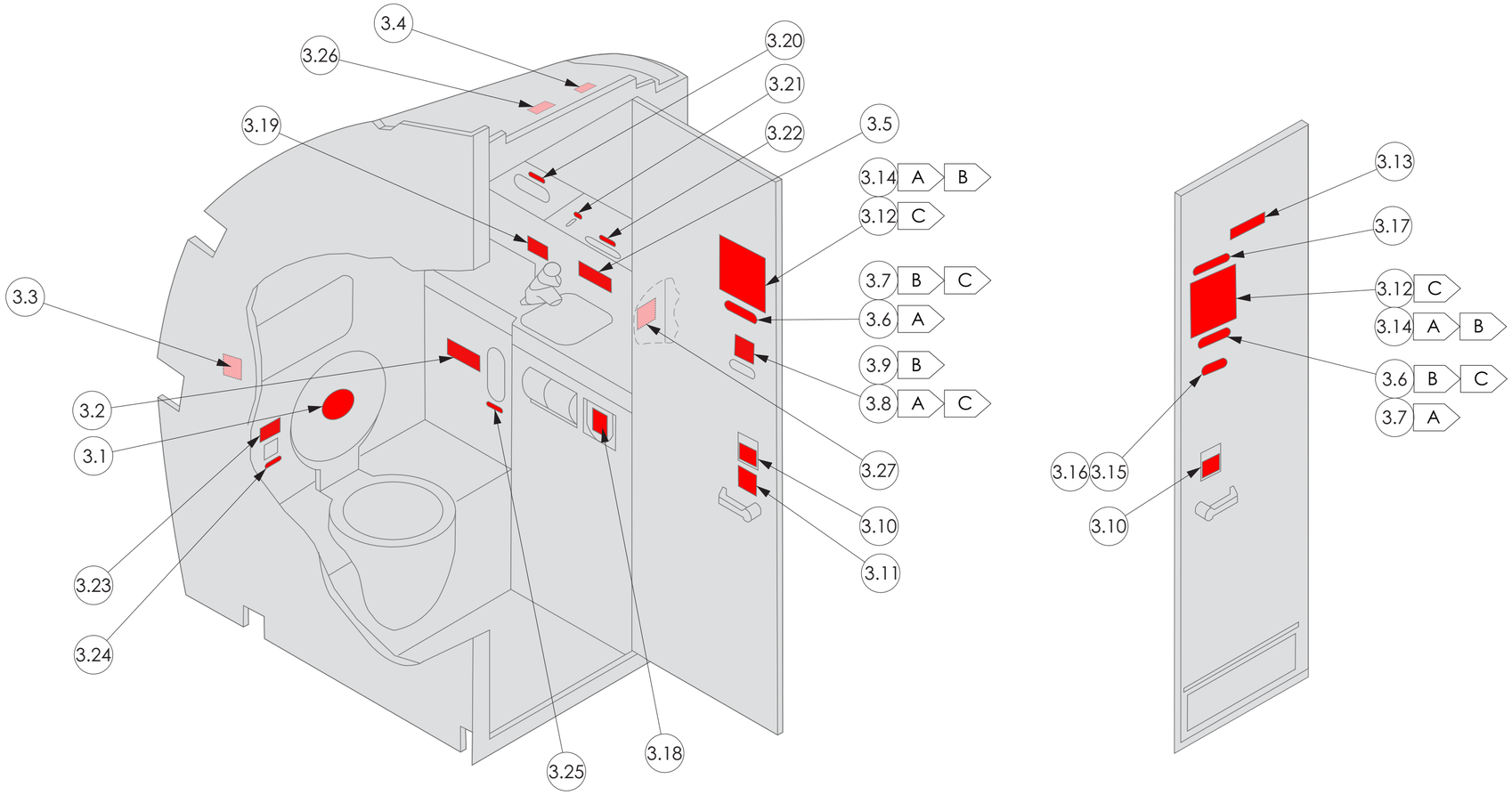

DWG SH NOTES:

A - Applicable for FWD L/H LA LAVATORY.

B - Applicable for AFT R/H LE LAVATORY.

C - Applicable for AFT L/H LD LAVATORY.

J&C AERO EEU

EASA APPROVAL NO: EASA.21J.580

WWW.THISISDOA.EU
INFO@THISISDOA.EU
PHONE: +353 15 269768

AIRCRAFT: BOEING 737-800	TOLERANCES: ANGULAR ±5°; DECIMALS X = ±1, X.X = ±0.5, X.XX = ±0.05		DRAWN BY: SEE ECN JCAERO/ECN/2091
MSN: 34280, 34281, 28241, 30628	REGISTRATION: -	SCALE: NTS / SIZE: A2 / ALL DIMENSIONS ARE MILLIMETERS / THIRD ANGLE PROJECTION	CHECKED BY: SEE ECN JCAERO/ECN/2091
TITLE: INTERIOR PLACARDS ILLUSTRATED CATALOGUE			
DRAWING NUMBER: SGL113JCAERO2091		SHEET 10 OF 34	REV. B

© J&C AERO EEU LTD. OWN THE COPYRIGHT OF THIS DRAWING AND IT SHALL NOT BE REPRODUCED BY ANY OTHER WITHOUT THE PRIOR WRITTEN PERMISSION

DOC/302 ISSUE 1.0

INTERIOR PLACARDS - 3. LAVATORY LA (L/H FWD), LAVATORY LD (L/H AFT) & LAVATORY LE (R/H AFT)

ITEM	PART NUMBER (OEM PART NUMBER)	PLACARD CONTENT	DESCRIPTION	SIZE (WXH); LETTERS HEIGHT	COLOR INDEX	QUANTITY	NOTE
3.1	JC737E051A11 (BAC29PPS36213)	RUBBISH IN TOILET (PROHIBITED)		140X140	4.1 4.3 4.7	3	
3.2	JC737E051A20 (BAC29PPS64291)	SANITARY NAPKINS, AIRSICK BAGS		124X60 5	4.3 4.7	3	
3.3	JC737E051A03 (BAC29PPS36194)	BABY CHANGING ROOM		51X51	4.3 4.7	3	
3.4	JC737E050A10 (BAC29PPS28526)	PULL MASK DOWN TO TURN ON OXYGEN	**Pull mask down to turn oxygen** EPA JC737E050A10	60X25 5	4.1 4.3	3	
3.5	JC737E051A27 (BAC29PPS34079)	USE YOUR TOWEL	**As a Courtesy to the Next Passenger May We Suggest that You Use Your Towel to Wipe Off the Water Basin. Thank You!** EPA JC737E051A27	115X26 4	4.3 4.7	3	

© J&C AERO EEU LTD. OWN THE COPYRIGHT OF THIS DRAWING AND IT SHALL NOT BE REPRODUCED BY ANY OTHER WITHOUT THE PRIOR WRITTEN PERMISSION

INTERIOR PLACARDS - 3. LAVATORY LA (L/H FWD), LAVATORY LD (L/H AFT) & LAVATORY LE (R/H AFT)

ITEM	PART NUMBER (OEM PART NUMBER)	PLACARD CONTENT	DESCRIPTION	SIZE (WXH); LETTERS HEIGHT	COLOR INDEX	QUANTITY	NOTES
3.6	JC737E060A25 (N/A)	PUSH DOOR TO OPEN OPEN DOOR SLOWLY		85X25 5	4.3 4.7	3	
3.7	JC737E060A26 (N/A)	PULL DOOR TO OPEN OPEN DOOR SLOWLY		85X25 5	4.3 4.7	3	
3.8	JC737E051A35 (BAC29PPS36200)	LOCK DOOR		51X51	4.3 4.7	2	APPLICABLE FOR FWD & AFT L/H LA & LD LAVATORY
3.9	JC737E051A36 (BAC29PPS36201)	LOCK DOOR		51X51	4.3 4.7	1	APPLICABLE FOR AFT R/H LE LAVATORY

© J&C AERO EEU LTD. OWN THE COPYRIGHT OF THIS DRAWING AND IT SHALL NOT BE REPRODUCED BY ANY OTHER WITHOUT THE PRIOR WRITTEN PERMISSION

INTERIOR PLACARDS - 3. LAVATORY LA (L/H FWD), LAVATORY LD (L/H AFT) & LAVATORY LE (R/H AFT)

ITEM	PART NUMBER (OEM PART NUMBER)	PLACARD CONTENT	DESCRIPTION	SIZE (WXH); LETTERS HEIGHT	COLOR INDEX	QUANTITY	NOTE
3.10	JC737E051A05 (BAC29PPS36206)	ASHTRAY		50X45	4.3 4.7	6	
3.11	JC737E051A37 (BAC29PPS40669)	NO SMOKING		51X51	4.1 4.3 4.7	6	
3.12	JC737E051A41 (BAC29PPS36195)	NO SMOKING IN LAVATORY, BABY CHANGING ROOM, WHEEL CHAIR ACCSESS		135X110 5; 13	4.1 4.3 4.7 4.17	3	APPLICABLE FOR LAVATORIES EQUIPPED WITH ADAPTATION FOR DISABLED AND FOR BABIES SWADDLING.
3.13	JC737E050A01 (N/A)	LAVATORY		32X148 21	4.3 4.7	3	

J&C AERO EEU
EASA APPROVAL NO: EASA.21J.580
WWW.THISISDOA.EU
INFO@THISISDOA.EU
PHONE: +353 15 269768

AIRCRAFT:	BOEING 737-800
TOLERANCES	ANGULAR =±5° DECIMALS X = ±1 X.X = ±0.5 X.XX = ±0.05
DRAWN BY:	SEE ECN JCAERO/ECN/2091
MSN:	34280, 34281, 28241, 30628
REGISTRATION:	-
SCALE:	NTS
SIZE:	A2
	ALL DIMENSIONS ARE MILLIMETERS THIRD ANGLE PROJECTION
CHECKED BY:	SEE ECN JCAERO/ECN/2091
TITLE:	INTERIOR PLACARDS ILLUSTRATED CATALOGUE
DRAWING NUMBER:	SGL113JCAERO2091
	SHEET 13 OF 34
REV.	B

© J&C AERO EEU LTD. OWN THE COPYRIGHT OF THIS DRAWING AND IT SHALL NOT BE REPRODUCED BY ANY OTHER WITHOUT THE PRIOR WRITTEN PERMISSION

INTERIOR PLACARDS - 3. LAVATORY LA (L/H FWD), LAVATORY LD (L/H AFT) & LAVATORY LE (R/H AFT)

ITEM	PART NUMBER (OEM PART NUMBER)	PLACARD CONTENT	DESCRIPTION	SIZE (WXH); LETTERS HEIGHT	COLOR INDEX	QUANTITY	NOTE
3.14	JC737E051A43 (BAC29PPS36197)	NO SMOKING IN LAVATORY, WHEEL CHAIR ACCSESS		135X110 5; 13	4.1 4.3 4.7 4.17	3	APPLICABLE FOR LAVATORIES EQUIPPED WITH ADAPTATION FOR DISABLED.
3.15	JC737E050A02 (N/A)	VACANT		57X20 4	4.2 4.12	3	
3.16	JC737E050A03 (N/A)	OCCUPIED		57X20 4	4.1 4.2	3	
3.17	JC737E050A60 (BAC29PPS57951)	CLOSE DOOR IMMEDIATELY WHEN NOT IN USE		105X25 5	4.1 4.3	3	
3.18	JC737E060A18 (N/A)	NO CIGARETTE DISPOSAL		115X110 6; 12.5	4.1 4.3 4.7	3	

J&C AERO EEU
EASA APPROVAL NO: EASA.21J.580
WWW.THISISDOA.EU
INFO@THISISDOA.EU
PHONE: +353 15 269768

AIRCRAFT: BOEING 737-800	TOLERANCES: ANGULAR ±5°; DECIMALS X = ±1, X.X = ±0.5, X.XX = ±0.05	DRAWN BY: SEE ECN JCAERO/ECN/2091	
MSN: 34280, 34281, 28241, 30628	REGISTRATION: -	SCALE: NTS; SIZE: A2; ALL DIMENSIONS ARE MILLIMETERS; THIRD ANGLE PROJECTION	CHECKED BY: SEE ECN JCAERO/ECN/2091
TITLE: INTERIOR PLACARDS ILLUSTRATED CATALOGUE			
DRAWING NUMBER: SGL113JCAERO2091		SHEET 14 OF 34	REV. B

© J&C AERO EEU LTD. OWN THE COPYRIGHT OF THIS DRAWING AND IT SHALL NOT BE REPRODUCED BY ANY OTHER WITHOUT THE PRIOR WRITTEN PERMISSION

INTERIOR PLACARDS - 3. LAVATORY LA (L/H FWD), LAVATORY LD (L/H AFT) & LAVATORY LE (R/H AFT)

ITEM	PART NUMBER (OEM PART NUMBER)	PLACARD CONTENT	DESCRIPTION	SIZE (WXH); LETTERS HEIGHT	COLOR INDEX	QUANTITY	NOTE
3.19	JC737E060A27 (N/A)	PRESS KNOB TO DRAIN WATER FROM SINK	**PRESS KNOB TO DRAIN WATER FROM SINK** EPA JC737E060A27	72X20 4	4.3 4.7	3	
3.20	JC737E060A28 (N/A)	FACIAL TISSUES	**FACIAL TISSUES** EPA JC737E060A28	55X15 4	4.3 4.7	3	
3.21	JC737E060A29 (N/A)	SOAP	**SOAP** JC737E060A29	25X15 4	4.3 4.7	3	
3.22	JC737E060A30 (N/A)	PAPER TOWELS	**PAPER TOWELS** EPA JC737E060A30	55X15 4	4.3 4.7	3	
3.23	JC737E050A40 (N/A)	FLUSHING TOILET PLEASE DO NOT PUT OBJECTS	**Flushing Toilet** **Please do not put objects such as airsick bags, diapers, or towels in toilet** EPA JC737E050A40	100X45 10; 4	4.3 4.7	3	
3.24	JC737E050A38 (N/A)	TOILET FLUSH	**TOILET FLUSH** EPA JC737E050A38	50X12 3.2	4.3 4.7	3	
3.25	JC737E060A31 (N/A)	SEAT COVERS	**SEAT COVERS** EPA JC737E060A31	55X15 4	4.3 4.7	3	
3.26	JC737E060A32 (N/A)	IT IS PROHIBIT TO OBSTRUCT OR TRY TO OBSTRUCT THE FUCTION OF THE SMOKE DETECTOR	**IT IS PROHIBIT TO OBSTRUCT OR TRY TO OBSTRUCT THE FUCTION OF THE SMOKE DETECTOR OF THIS LAVATORY** EPA JC737E060A32	153X31 5	4.1 4.3	3	
3.27	JC737E060A33 (N/A)	RETURN TO YOUR SEAT WHEN THE LIGHT IS ON	**RETURN TO YOUR SEAT WHEN THE LIGHT IS ON** EPA JC737E060A33	73X20 4	4.3 4.7	3	

© J&C AERO EEU LTD. OWN THE COPYRIGHT OF THIS DRAWING AND IT SHALL NOT BE REPRODUCED BY ANY OTHER WITHOUT THE PRIOR WRITTEN PERMISSION

DRAWING NUMBER: SGL113JCAERO2091

INTERIOR PLACARDS - 4. FLIGHT DECK

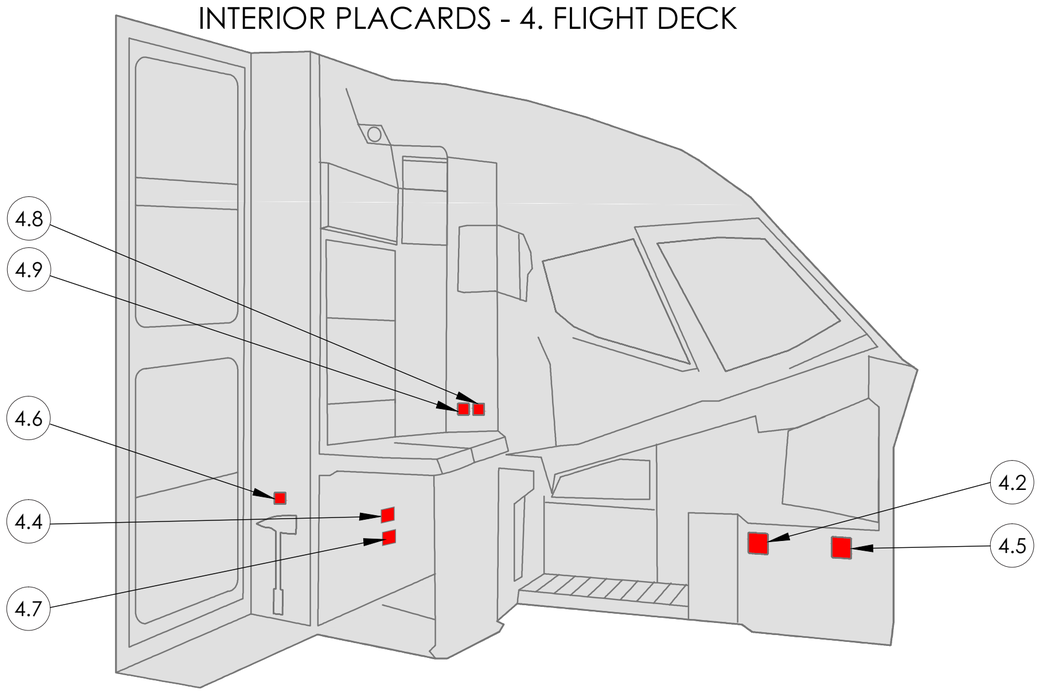

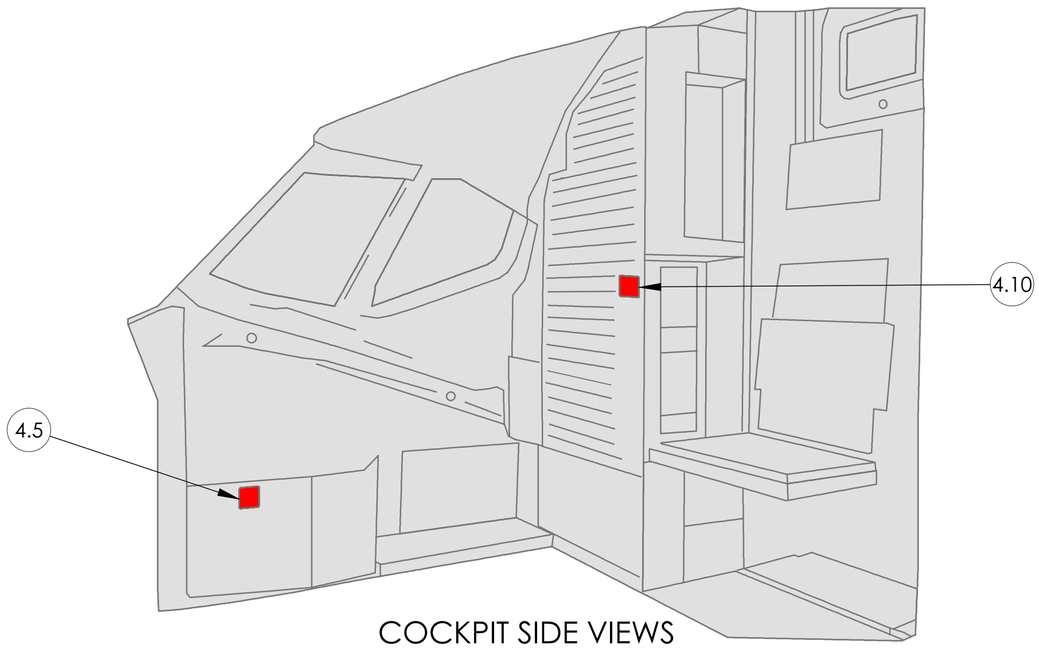

COCKPIT SIDE VIEWS

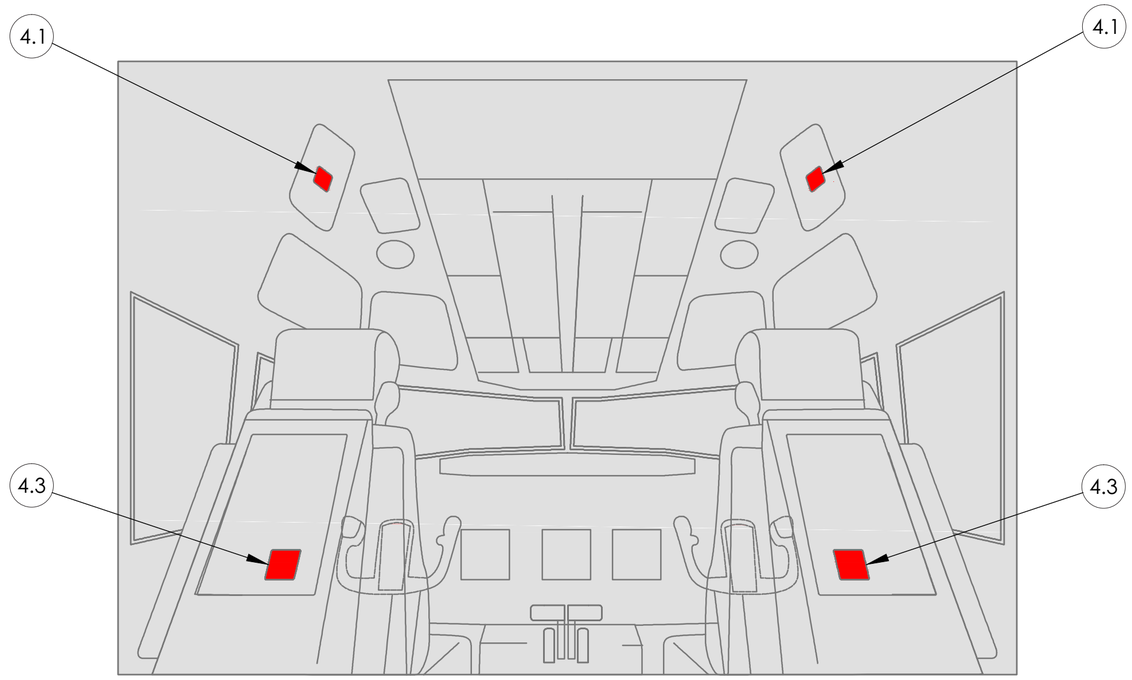

COCKPIT FWD DIRECTION VIEW

J&C AERO EEU
EASA APPROVAL NO: EASA.21J.580

WWW.THISISDOA.EU
INFO@THISISDOA.EU
PHONE: +353 15 269768

AIRCRAFT: BOEING 737-800	TOLERANCES: ANGULAR ±±5° DECIMALS X = ±1, X.X = ±0.5, X.XX = ±0.05		DRAWN BY: SEE ECN JCAERO/ECN/2091
MSN: 34280, 34281, 28241, 30628	REGISTRATION: -	SCALE: NTS / SIZE: A2 / ALL DIMENSIONS ARE MILLIMETERS / THIRD ANGLE PROJECTION	CHECKED BY: SEE ECN JCAERO/ECN/2091
TITLE: INTERIOR PLACARDS ILLUSTRATED CATALOGUE			
DRAWING NUMBER: SGL113JCAERO2091		SHEET 16 OF 34	REV. B

© J&C AERO EEU LTD. OWN THE COPYRIGHT OF THIS DRAWING AND IT SHALL NOT BE REPRODUCED BY ANY OTHER WITHOUT THE PRIOR WRITTEN PERMISSION

DOC/302 ISSUE 1.0

INTERIOR PLACARDS - 4. FLIGHT DECK

ITEM	PART NUMBER (OEM PART NUMBER)	PLACARD CONTENT	DESCRIPTION	SIZE (WXH); LETTERS HEIGHT	COLOR INDEX	QUANTITY	NOTE
4.1	JC737E100A03 (N/A)	ESCAPE ROPE		51X51 3	4.1 4.3 4.7	2	
4.2	JC737E031A07 (N/A)	FIRE PROTECTIVE GLOVES		51X51 3	4.3 4.7 4.19	1	
4.3	JC737E031A15 (BAC29PPS36236)	CREW LIFE VESTS		51X51 3	4.1 4.2 4.3 4.7 4.8	4	
4.4	JC737E031A03 (BAC29PPS36225)	FLASHLIGHT		51X51 3	4.1 4.3 4.7	1	
4.5	JC737E031A08 (BAC27DCC2896)	SMOKE GOGGLES		51X51 3	4.3 4.4 4.5 4.7 4.9 4.18 4.19	2	
4.6	JC737E031A09 (N/A)	CRASH AXE	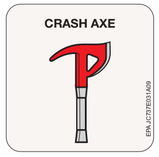	51X51 3	4.1 4.3 4.4 4.7	1	

J&C AERO EEU
EASA APPROVAL NO: EASA.21J.580
WWW.THISISDOA.EU
INFO@THISISDOA.EU
PHONE: +353 15 269768

AIRCRAFT: BOEING 737-800	TOLERANCES: ANGULAR ±±5°; DECIMALS X = ±1, X.X = ±0.5, X.XX = ±0.05		DRAWN BY: SEE ECN JCAERO/ECN/2091
MSN: 34280, 34281, 28241, 30628	REGISTRATION: -	SCALE: NTS / SIZE: A2	ALL DIMENSIONS ARE MILLIMETERS; THIRD ANGLE PROJECTION	CHECKED BY: SEE ECN JCAERO/ECN/2091
TITLE: INTERIOR PLACARDS ILLUSTRATED CATALOGUE			
DRAWING NUMBER: SGL113JCAERO2091		SHEET 17 OF 34	REV. B

© J&C AERO EEU LTD. OWN THE COPYRIGHT OF THIS DRAWING AND IT SHALL NOT BE REPRODUCED BY ANY OTHER WITHOUT THE PRIOR WRITTEN PERMISSION

INTERIOR PLACARDS - 4. FLIGHT DECK

ITEM	PART NUMBER (OEM PART NUMBER)	PLACARD CONTENT	DESCRIPTION	SIZE (WXH); LETTERS HEIGHT	COLOR INDEX	QUANTITY	NOTE
4.7	JC737E031A06 (BAC29PPS36232)	SMOKE HOOD		51X51 3	4.1 4.3 4.7	1	
4.8	JC737E030A04 (BAC29PPS36225) (BAC29PPS36208)	FLASHLIGHT DOWN		51X51 3	4.1 4.3 4.7	1	
4.9	JC737E030A05 (BAC29PPS36232) (BAC29PPS36208)	PBE DOWN		51X51 3	4.1 4.3 4.7	1	
4.10	JC737E031A04 (BAC29PPS36229)	FIRE EXTINGUISHER		51X51 3.2	4.1 4.3 4.7	1	

J&C AERO EEU
EASA APPROVAL NO: EASA.21J.580
WWW.THISISDOA.EU
INFO@THISISDOA.EU
PHONE: +353 15 269768

AIRCRAFT: BOEING 737-800	TOLERANCES: ANGULAR ±±5°; DECIMALS X = ±1, X.X = ±0.5, X.XX = ±0.05			DRAWN BY: SEE ECN JCAERO/ECN/2091
MSN: 34280, 34281, 28241, 30628	REGISTRATION: -	SCALE: NTS	SIZE: A2	ALL DIMENSIONS ARE MILLIMETERS; THIRD ANGLE PROJECTION	CHECKED BY: SEE ECN JCAERO/ECN/2091
TITLE: INTERIOR PLACARDS ILLUSTRATED CATALOGUE				
DRAWING NUMBER: SGL113JCAERO2091			SHEET 18 OF 34	REV. B

© J&C AERO EEU LTD. OWN THE COPYRIGHT OF THIS DRAWING AND IT SHALL NOT BE REPRODUCED BY ANY OTHER WITHOUT THE PRIOR WRITTEN PERMISSION

DRAWING NUMBER: SGL113JCAERO2091

INTERIOR PLACARDS - 5. GALLEY

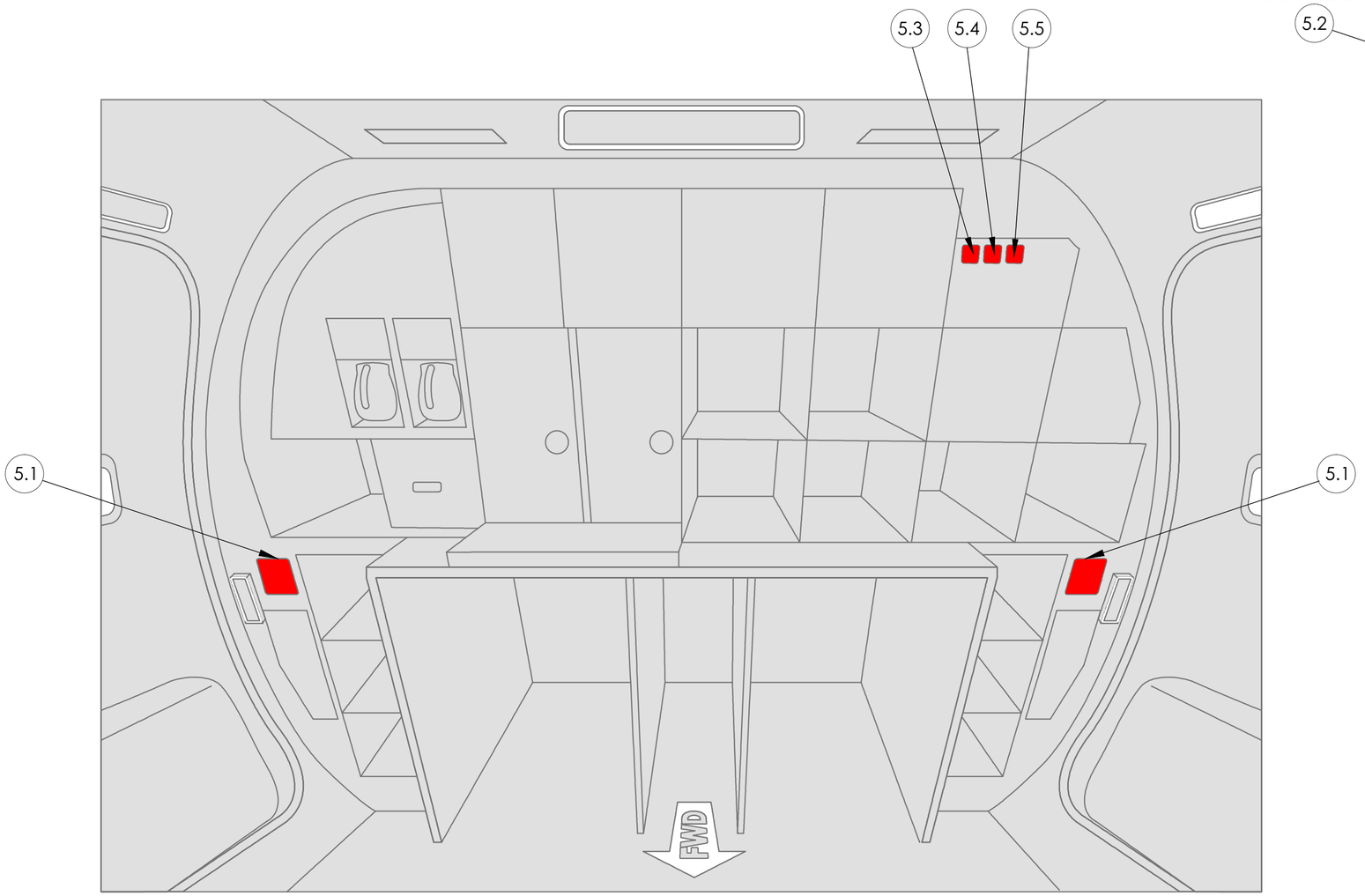

5.1 GALLEY G4B

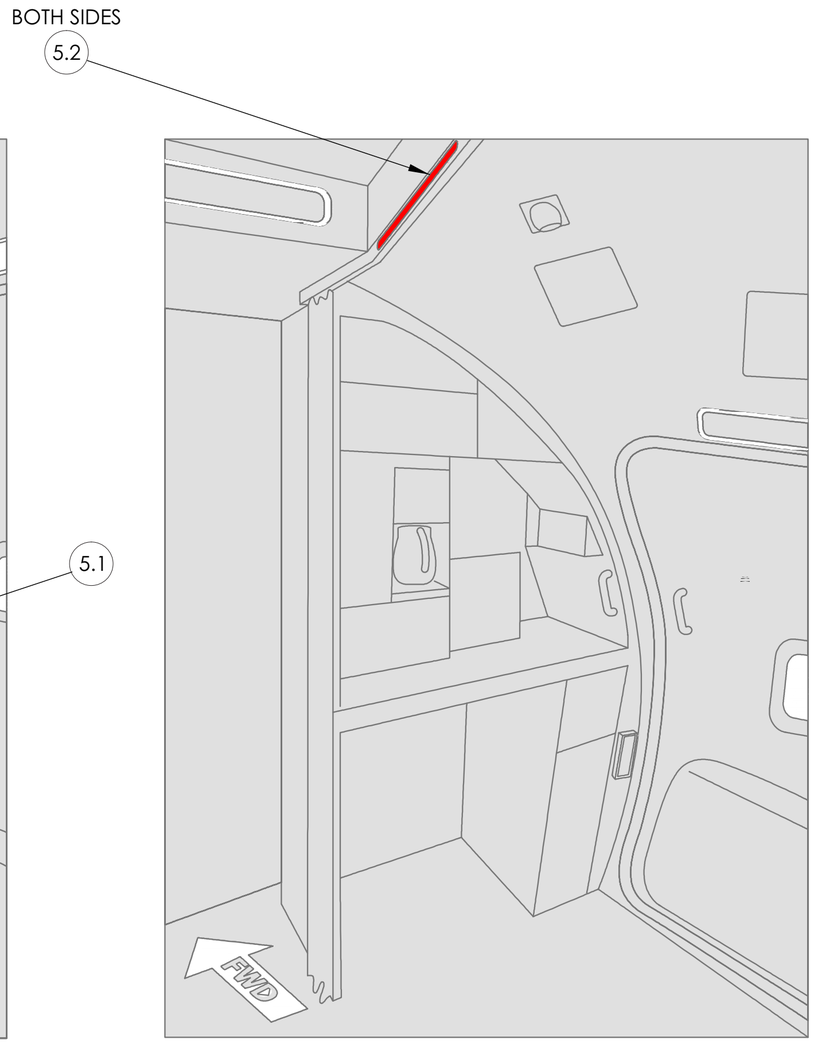

5.2 GALLEY G1

J&C AERO EEU
EASA APPROVAL NO: EASA.21J.580

WWW.THISISDOA.EU
INFO@THISISDOA.EU
PHONE: +353 15 269768

AIRCRAFT: BOEING 737-800	TOLERANCES: ANGULAR =±5°; DECIMALS X = ±1, X.X = ±0.5, X.XX = ±0.05		DRAWN BY: SEE ECN JCAERO/ECN/2091
MSN: 34280, 34281, 28241, 30628	REGISTRATION: -	SCALE: NTS / SIZE: A2 / ALL DIMENSIONS ARE MILLIMETERS / THIRD ANGLE PROJECTION	CHECKED BY: SEE ECN JCAERO/ECN/2091
TITLE: INTERIOR PLACARDS ILLUSTRATED CATALOGUE			
DRAWING NUMBER: SGL113JCAERO2091		SHEET 19 OF 34	REV. B

© J&C AERO EEU LTD. OWN THE COPYRIGHT OF THIS DRAWING AND IT SHALL NOT BE REPRODUCED BY ANY OTHER WITHOUT THE PRIOR WRITTEN PERMISSION

DOC/302 ISSUE 1.0

INTERIOR PLACARDS - 5. GALLEY

ITEM	PART NUMBER (OEM PART NUMBER)	PLACARD CONTENT	DESCRIPTION	SIZE (WXH); LETTERS HEIGHT	COLOR INDEX	QUANTITY	NOTE
5.1	JC737E060A18 (N/A)	NO CIGARETTE DISPOSAL		115X110 6; 12.5	4.1 4.3 4.7	3	
5.2	JC737E013A03 (BAC29PPS36214)	FASTEN CURTAIN CLOSED		229X9 5	4.3 4.7	2	
5.3	JC737E031A01 (BAC29PPS40715)	DEMO KIT		51X51 3.2	4.1 4.2 4.3 4.7 4.8 4.11 4.15 4.17	1	
5.4	JC737E031A07 (N/A)	FIRE PROTECTIVE GLOVES		51X51 3.2	4.3 4.7 4.19	1	
5.5	JC737E031A19 (N/A)	INFANT SEAT BELTS		51X51 3.2	4.3 4.7 4.11 4.13	1	

© J&C AERO EEU LTD. OWN THE COPYRIGHT OF THIS DRAWING AND IT SHALL NOT BE REPRODUCED BY ANY OTHER WITHOUT THE PRIOR WRITTEN PERMISSION

DRAWING NUMBER: SGL113JCAERO2091

INTERIOR PLACARDS - 6. ATTENDANT STATION

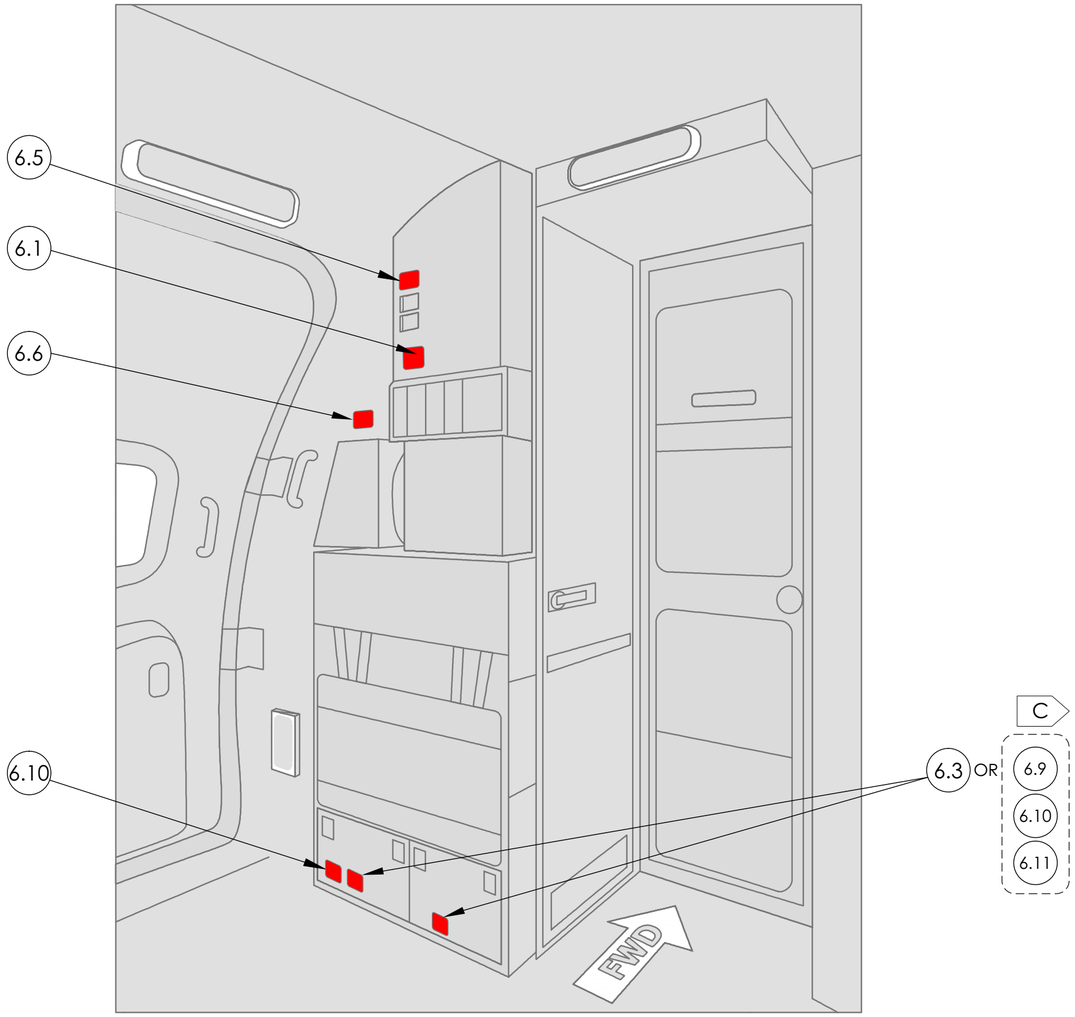

6.1 FWD L/H ATTENDANT STATION

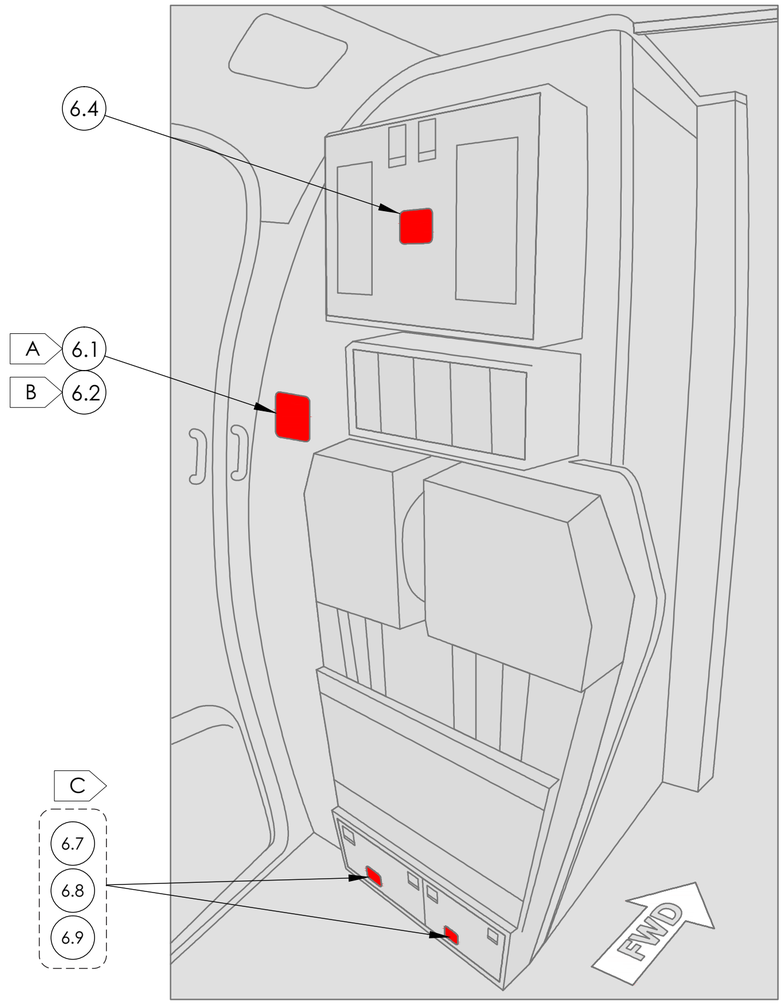

6.2 AFT L/H ATTENDANT STATION

AFT R/H ATTENDANT STATION IS SIMMETRICAL

DWG SH NOTES:

- A - APPLICABLE ONLY ON L/H ATTENDANT STATIONS.
- B - APPLICABLE ONLY ON R/H ATTENDANT STATION.
- C - A COMBINATION OF PLACARDS CAN BE APPLIED I.A.W. LATEST APPROVED EEL.

J&C AERO EEU
EASA APPROVAL NO: EASA.21J.580
WWW.THISISDOA.EU
INFO@THISISDOA.EU
PHONE: +353 15 269768

AIRCRAFT: BOEING 737-800	TOLERANCES: ANGULAR ±±5°; DECIMALS X = ±1, X.X = ±0.5, X.XX = ±0.05		DRAWN BY: SEE ECN JCAERO/ECN/2091
MSN: 34280, 34281, 28241, 30628	REGISTRATION: -	SCALE: NTS / SIZE: A2	ALL DIMENSIONS ARE MILLIMETERS; THIRD ANGLE PROJECTION	CHECKED BY: SEE ECN JCAERO/ECN/2091
TITLE: INTERIOR PLACARDS ILLUSTRATED CATALOGUE			
DRAWING NUMBER: SGL113JCAERO2091		SHEET 21 OF 34	REV. B

© J&C AERO EEU LTD. OWN THE COPYRIGHT OF THIS DRAWING AND IT SHALL NOT BE REPRODUCED BY ANY OTHER WITHOUT THE PRIOR WRITTEN PERMISSION

DOC/302 ISSUE 1.0

INTERIOR PLACARDS - 6. ATTENDANT STATION

ITEM	PART NUMBER (OEM PART NUMBER)	PLACARD CONTENT	DESCRIPTION	SIZE (WXH); LETTERS HEIGHT	COLOR INDEX	QUANTITY	NOTE
6.1	JC737E030A01 (BAC29PPS36236) (BAC29PPS36232) (BAC29PPS36225) (BAC29PPS36210)	CREW USE ONLY		90X110 7.7	4.1 4.2 4.3 4.7 4.8	2	ONLY ON L/H
6.2	JC737E030A02 (BAC29PPS36236) (BAC29PPS36232) (BAC29PPS36225) (BAC29PPS36553)	CREW USE ONLY		90X110 7.7	4.1 4.2 4.3 4.7 4.8	1	ONLY ON R/H
6.3	JC737E031A51 BAC29PPS36236) (BAC29PPS36232) (BAC29PPS36225)	SMOKE HOOD CREW LIFE VEST FLASHLIGHT		90X51 3.2	4.1 4.2 4.3 4.7 4.8	6	
6.4	JC737E031A04 (BAC29PPS36229)	FIRE EXTINGUISHER		51X51 3.2	4.1 4.3 4.7	2	
6.5	JC737E034A02 (BAC29PPS36218)	DOOR MUST BE CLOSED	**Door must be closed and latched during taxi, takeoff and landing.** EPA JC737E034A02	75X25 4	4.3 4.7	3	
6.6	JC737E034A01 (BAC29PPS36211)	INBOARD ATTENDANT SEAT ONLY	**Inboard attendant seat must be occupied during taxi, takeoff and landing to comply with cabin viewing requirements.** EPA JC737E034A01	94X30 4	4.3 4.7	1	

© J&C AERO EEU LTD. OWN THE COPYRIGHT OF THIS DRAWING AND IT SHALL NOT BE REPRODUCED BY ANY OTHER WITHOUT THE PRIOR WRITTEN PERMISSION

INTERIOR PLACARDS - 6. ATTENDANT STATION

ITEM	PART NUMBER (OEM PART NUMBER)	PLACARD CONTENT	DESCRIPTION	SIZE (WXH); LETTERS HEIGHT	COLOR INDEX	QUANTITY	NOTE
6.7	JC737E031A06 (BAC29PPS36232)	SMOKE HOOD		51X51 3	4.1 4.3 4.7	6	
6.8	JC737E031A15 (BAC29PPS36236)	CREW LIFE VESTS		51X51 3	4.1 4.7 4.3 4.8	6	
6.9	JC737E031A03 (BAC29PPS36225)	FLASHLIGHT		51X51 3	4.1 4.3 4.7	6	
6.10	JC737E034A13 (N/A)	RESTRAINT KIT		74X17 6	4.3 4.7	6	

© J&C AERO EEU LTD. OWN THE COPYRIGHT OF THIS DRAWING AND IT SHALL NOT BE REPRODUCED BY ANY OTHER WITHOUT THE PRIOR WRITTEN PERMISSION

INTERIOR PLACARDS - 7. OVERHEAD STOWAGE BINS

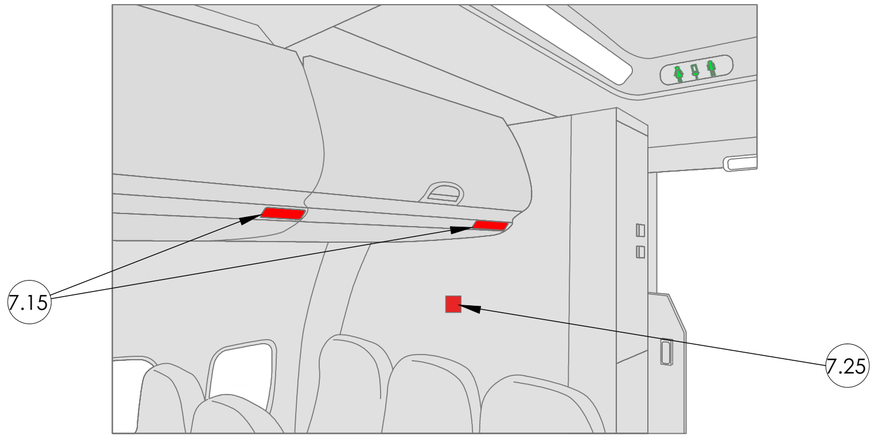

7.1 AFT R/H OVERHEAD STOWAGE BINS A

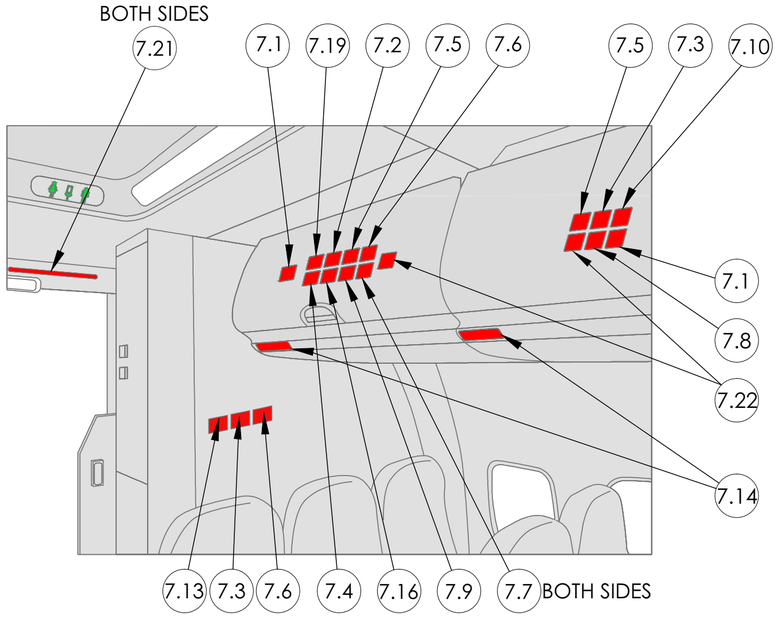

7.1 AFT L/H OVERHEAD STOWAGE BINS A

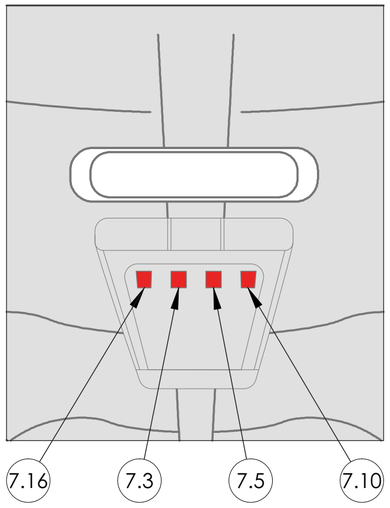

7.2 FORWARD CENTER O/H BIN A

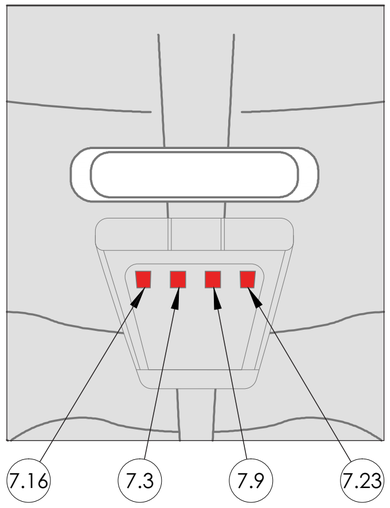

7.2 MID FWD CENTER O/H BIN A

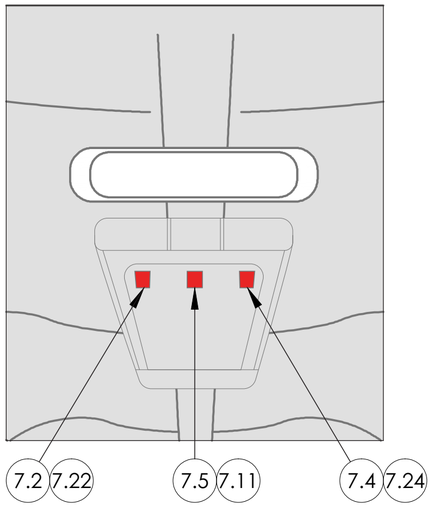

7.2 MID AFT CENTER O/H BIN A

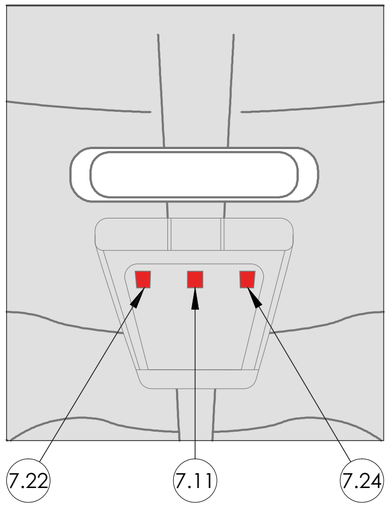

7.2 AFT CENTER O/H BIN A

DWG SH NOTES: A - A COMBINATION OF PLACARDS CAN BE APPLIED I.A.W. LATEST APPROVED EEL.

J&C AERO EEU
EASA APPROVAL NO: EASA.21J.580

WWW.THISISDOA.EU
INFO@THISISDOA.EU
PHONE: +353 15 269768

AIRCRAFT: BOEING 737-800	TOLERANCES: ANGULAR ±5°; DECIMALS X = ±1, X.X = ±0.5, X.XX = ±0.05		DRAWN BY: SEE ECN JCAERO/ECN/2091
MSN: 34280, 34281, 28241, 30628	REGISTRATION: -	SCALE: NTS / SIZE: A2 / ALL DIMENSIONS ARE MILLIMETERS / THIRD ANGLE PROJECTION	CHECKED BY: SEE ECN JCAERO/ECN/2091
TITLE: INTERIOR PLACARDS ILLUSTRATED CATALOGUE			
DRAWING NUMBER: SGL113JCAERO2091		SHEET 24 OF 34	REV. B

© J&C AERO EEU LTD. OWN THE COPYRIGHT OF THIS DRAWING AND IT SHALL NOT BE REPRODUCED BY ANY OTHER WITHOUT THE PRIOR WRITTEN PERMISSION

DRAWING NUMBER: SGL113JCAERO2091

INTERIOR PLACARDS - 7. OVERHEAD STOWAGE BINS

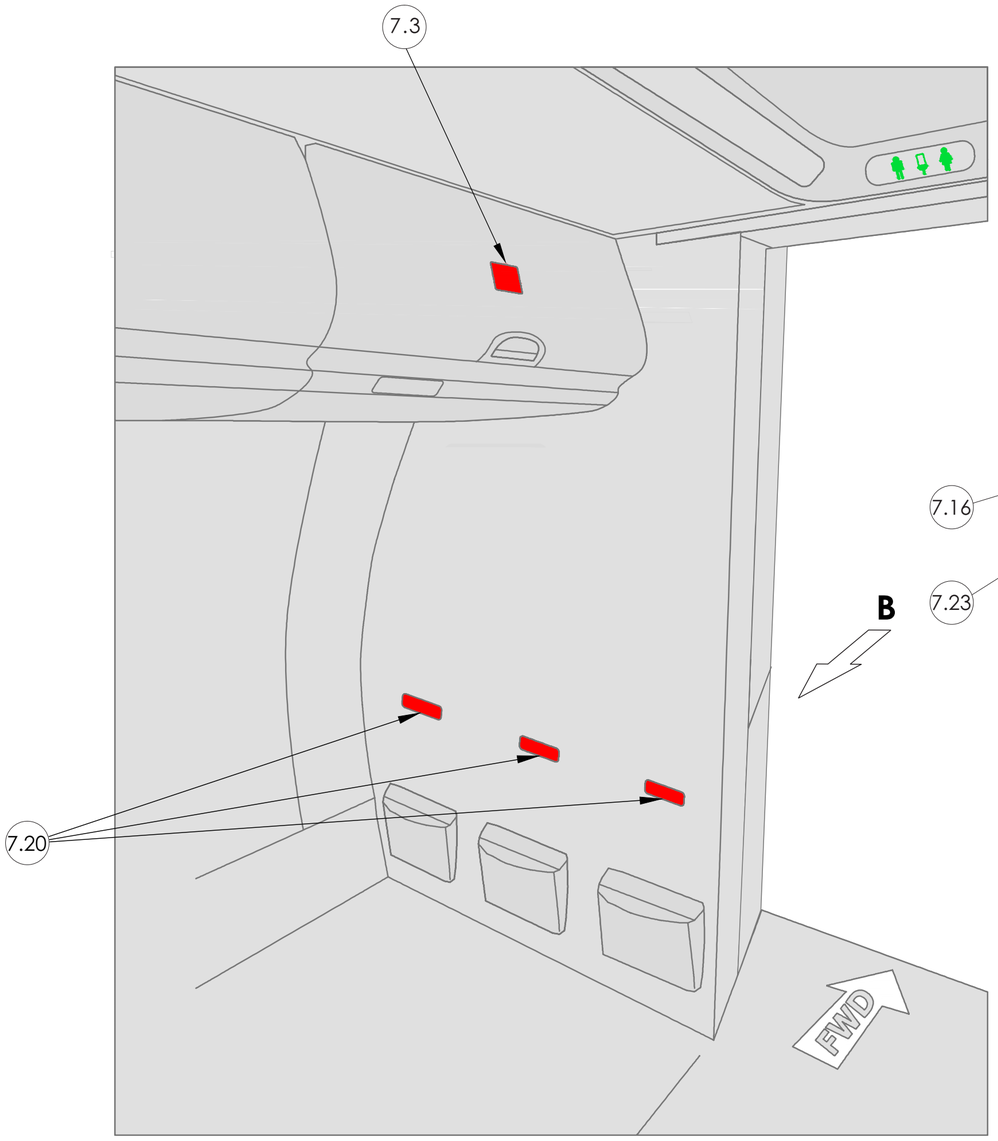

7.3 FWD L/H OVERHEAD STOWAGE BINS

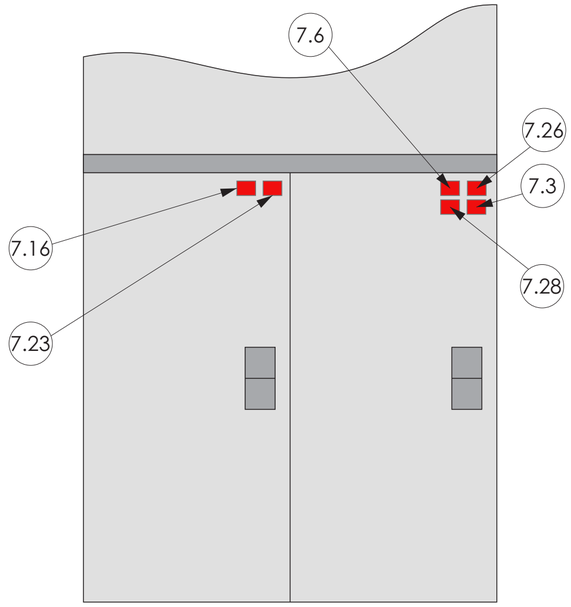

VIEW ON ARROW B
WINDSCREEN STOWAGE

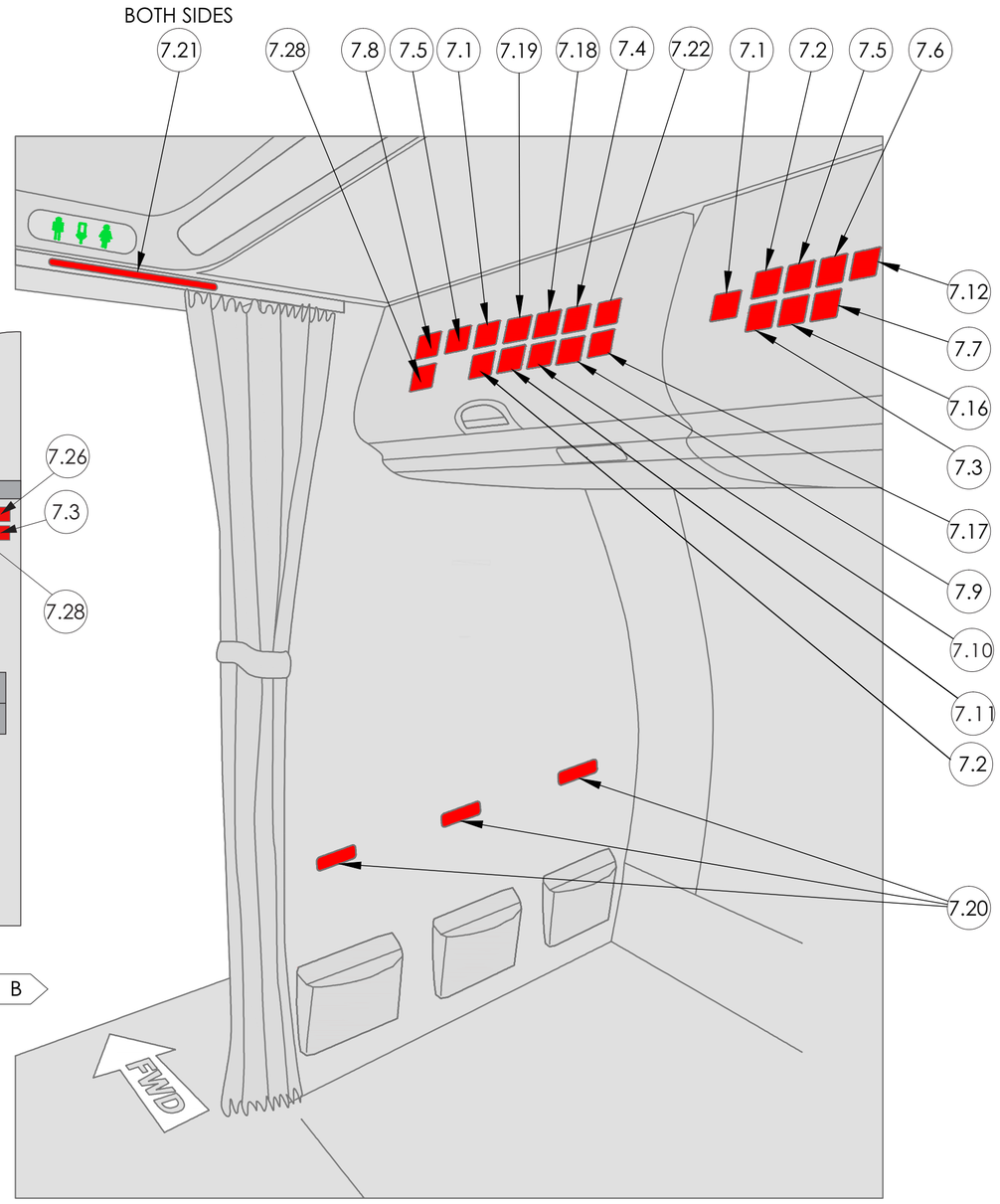

7.3 FWD R/H OVERHEAD STOWAGE BINS

DWG SH NOTES: A - A COMBINATION OF PLACARDS CAN BE APPLIED I.A.W. LATEST APPROVED EEL.
B - IF INSTALLED, A COMBINATION OF EMERGENCY EQUIPMENT PLACARDS CAN BE APPLIED ON WINDSCREEN STOWAGE I.A.W. LATEST APPROVED EEL.

J&C AERO EEU
EASA APPROVAL NO: EASA.21J.580

WWW.THISISDOA.EU
INFO@THISISDOA.EU
PHONE: +353 15 269768

AIRCRAFT: BOEING 737-800	TOLERANCES: ANGULAR ±5°; DECIMALS X = ±1, X.X = ±0.5, X.XX = ±0.05		DRAWN BY: SEE ECN JCAERO/ECN/2091
MSN: 34280, 34281, 28241, 30628	REGISTRATION: -	SCALE: NTS / SIZE: A2 / ALL DIMENSIONS ARE MILLIMETERS / THIRD ANGLE PROJECTION	CHECKED BY: SEE ECN JCAERO/ECN/2091
TITLE: INTERIOR PLACARDS ILLUSTRATED CATALOGUE			
DRAWING NUMBER: SGL113JCAERO2091		SHEET 25 OF 34	REV. B

© J&C AERO EEU LTD. OWN THE COPYRIGHT OF THIS DRAWING AND IT SHALL NOT BE REPRODUCED BY ANY OTHER WITHOUT THE PRIOR WRITTEN PERMISSION

DOC/302 ISSUE 1.0

INTERIOR PLACARDS - 7. OVERHEAD STOWAGE BINS

ITEM	PART NUMBER (OEM PART NUMBER)	PLACARD CONTENT	DESCRIPTION	SIZE (WXH); LETTERS HEIGHT	COLOR INDEX	QUANTITY	NOTE
7.1	JC737E032A18 (BAC29PPS44393)	EMERGENCY EQUIPMENT ONLY		64X25 5	4.1 4.3	1	
7.2	JC737E031A18 (BAC29PPS38318)	SEAT BELT EXTENSION		51X 51 3.2.	4.3 4.4 4.7 4.13	3	
7.3	JC737E031A20 (BAC29PPS36227)	FIRST AID KIT		51X51 3.8	4.1 4.3 4.12	3	
7.4	JC737E031A16 (N/A)	INFANT LIFE VEST		51X51 3.2	4.1 4.3 4.7 4.8	4	
7.5	JC737E031A19 (N/A)	INFANT SEAT BELTS		51X51 3.2	4.3 4.7 4.11 4.13	5	
7.6	JC737E031A02 (BAC29PPS36230)	MEGAPHONE		51X51 3.2	4.1 4.3 4.7	3	

© J&C AERO EEU LTD. OWN THE COPYRIGHT OF THIS DRAWING AND IT SHALL NOT BE REPRODUCED BY ANY OTHER WITHOUT THE PRIOR WRITTEN PERMISSION

INTERIOR PLACARDS - 7. OVERHEAD STOWAGE BINS

ITEM	PART NUMBER (OEM PART NUMBER)	PLACARD CONTENT	DESCRIPTION	SIZE (WXH); LETTERS HEIGHT	COLOR INDEX	QUANTITY	NOTE
7.7	JC737E031A10 (N/A)	OXYGEN MASK		51X51 3.2	4.3 4.7 4.8 4.13	4	
7.8	JC737E031A12 (BAC29PPS36233)	TRANSMITTER		51X51 3.2	4.1 4.3 4.7	2	
7.9	JC737E031A14 (N/A)	SPARE LIFE VESTS		51X51 3.2	4.1 4.3 4.7 4.8	2	
7.10	JC737E031A17 (N/A)	SPARE SEAT BELT	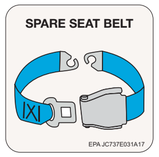	51X51 3.2	4.3 4.4 4.7 4.14	1	
7.11	JC737E031A23 (N/A)	DEFIBRILLATOR		51X51 3.7	4.1 4.3 4.7 4.4 4.5	1	
7.12	JC737E031A55 (BAC29PPS38297)	WHEEL CHAIR		51X51	4.3 4.17	1	

J&C AERO EEU
EASA APPROVAL NO: EASA.21J.580
WWW.THISISDOA.EU
INFO@THISISDOA.EU
PHONE: +353 15 269768

AIRCRAFT: BOEING 737-800
TOLERANCES: ANGULAR ±±5°; DECIMALS X = ±1, X.X = ±0.5, X.XX = ±0.05
DRAWN BY: SEE ECN JCAERO/ECN/2091
MSN: 34280, 34281, 28241, 30628
REGISTRATION: -
SCALE: NTS
SIZE: A2
ALL DIMENSIONS ARE MILLIMETERS
THIRD ANGLE PROJECTION
CHECKED BY: SEE ECN JCAERO/ECN/2091
TITLE: INTERIOR PLACARDS ILLUSTRATED CATALOGUE
DRAWING NUMBER: SGL113JCAERO2091
SHEET 27 OF 34
REV. B

© J&C AERO EEU LTD. OWN THE COPYRIGHT OF THIS DRAWING AND IT SHALL NOT BE REPRODUCED BY ANY OTHER WITHOUT THE PRIOR WRITTEN PERMISSION

DRAWING NUMBER: SGL113JCAERO2091

INTERIOR PLACARDS - 7. OVERHEAD STOWAGE BINS

ITEM	PART NUMBER (OEM PART NUMBER)	PLACARD CONTENT	DESCRIPTION	SIZE (WXH); LETTERS HEIGHT)	COLOR INDEX	QUANTITY	NOTE
7.13	JC737E031A64 (BAC29PPS36208)	ARROW DOWN		51X51	4.3 4.7	1	
7.14	FROM JC737E004A01 TO JC737E004A31	SEAT ROW DESIGNATOR FROM ROW 1 TO ROW 31		152X29 24.5; 6	4.3 4.7	1 EA	
7.15	FROM JC737E005A01 TO JC737E005A31	SEAT ROW DESIGNATOR FROM ROW 1 TO ROW 31		152X29 24.5; 6	4.3 4.7	1 EA	
7.16	JC737E031A11 (BAC29PPS36231)	OXYGEN BOTTLE		51X51 3.2	4.3 4.7 4.12	2	
7.17	JC737E034A12 (N/A)	DANGEROUS GOODS KIT	**DANGEROUS GOODS KIT** EPA JC737E034A12	115X17 6	4.3 4.7	1	
7.18	JC737E034A13 (N/A)	RESTRAINT KIT	**RESTRAINT KIT** EPA JC737E034A13	74X17 6	4.3 4.7	1	
7.19	JC737E031A01 (BAC29PPS40715)	DEMO KIT		51X51 3.2	4.1 4.2 4.3 4.7 4.8 4.11 4.15 4.17	2	
7.20	JC737E015A70 (BAC29PPS29737)	LIFE VEST UNDER YOUR SEAT. PLEASE FASTEN SEAT BELT WHILE SEATED.	**LIFE VEST UNDER YOUR SEAT PLEASE FASTEN SEAT BELT WHILE SEATED** EPA JC737E015A70	158X25 5	4.1 4.3 4.7	6	

J&C AERO EEU
EASA APPROVAL NO: EASA.21J.580

WWW.THISISDOA.EU
INFO@THISISDOA.EU
PHONE: +353 15 269768

AIRCRAFT: BOEING 737-800
MSN: 34280, 34281, 28241, 30628
REGISTRATION: -
TOLERANCES: ANGULAR ±0.5°; DECIMALS X = ±1, X.X = ±0.5, X.XX = ±0.05
SCALE: NTS
SIZE: A2
ALL DIMENSIONS ARE MILLIMETERS
THIRD ANGLE PROJECTION
DRAWN BY: SEE ECN JCAERO/ECN/2091
CHECKED BY: SEE ECN JCAERO/ECN/2091
TITLE: INTERIOR PLACARDS ILLUSTRATED CATALOGUE
DRAWING NUMBER: SGL113JCAERO2091
SHEET 28 OF 34
REV. B

© J&C AERO EEU LTD. OWN THE COPYRIGHT OF THIS DRAWING AND IT SHALL NOT BE REPRODUCED BY ANY OTHER WITHOUT THE PRIOR WRITTEN PERMISSION

DOC/302 ISSUE 1.0

INTERIOR PLACARDS - 7. OVERHEAD STOWAGE BINS

ITEM	PART NUMBER (OEM PART NUMBER)	PLACARD CONTENT	DESCRIPTION	SIZE (WXH); LETTERS HEIGHT	COLOR INDEX	QUANTITY	NOTE
7.21	JC737E013A03 (BAC29PPS36214)	FASTEN CURTAIN OPEN DURING TAXI, TAKEOFF AND LANDING		229X9 5	4.3 4.7	4	
7.22	JC737E031A30 (N/A)	EMERGENCY MEDICAL KIT		51X51 3.2	4.3 4.7 4.12	3	
7.23	JC737E031A04 (BAC29PPS36229)	FIRE EXTINGUISHER		51X51 3	4.1 4.3 4.7	2	
7.24	JC737E034A14 (N/A)	AMBU KIT		50X17 6	4.3 4.7	1	
7.25	JC737E030A03 (BAC29PPS36231) (BAC29PPS36208)	OXYGEN BOTTLE DOWN		51X51 3.2	4.3 4.7 4.12	2	
7.26	JC737E031A06 (BAC29PPS36232)	SMOKE HOOD		51X51 3.2	4.1 4.3 4.7	1	
7.27	JC737E031A07 (N/A)	FIRE PROTECTIVE GLOVES		51X51 3.2	4.3 4.7 4.19	1	
7.28	JC737E034A35 (N/A)	UNIVERSAL PRECAUTION KIT		130X17 6	4.3 4.7	1	

© J&C AERO EEU LTD. OWN THE COPYRIGHT OF THIS DRAWING AND IT SHALL NOT BE REPRODUCED BY ANY OTHER WITHOUT THE PRIOR WRITTEN PERMISSION

DRAWING NUMBER: SGL113JCAERO2091

INTERIOR PLACARDS - 8. PASSENGER SEATS

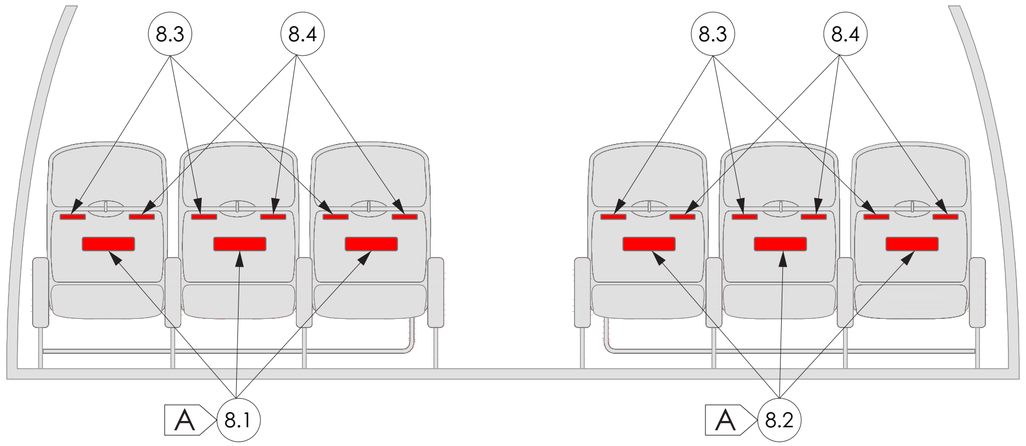

ECONOMY SEATS

DWG SH NOTES: A - INSTALLED ONLY ON 13 & 14 ROW SEATS

J&C AERO EEU
EASA APPROVAL NO: EASA.21J.580
WWW.THISISDOA.EU
INFO@THISISDOA.EU
PHONE: +353 15 269768

AIRCRAFT: BOEING 737-800	TOLERANCES: ANGULAR ±5°; DECIMALS X = ±1, X.X = ±0.5, X.XX = ±0.05		DRAWN BY: SEE ECN JCAERO/ECN/2091
MSN: 34280, 34281, 28241, 30628	REGISTRATION: -	SCALE: NTS / SIZE: A2 / ALL DIMENSIONS ARE MILLIMETERS / THIRD ANGLE PROJECTION	CHECKED BY: SEE ECN JCAERO/ECN/2091
TITLE: INTERIOR PLACARDS ILLUSTRATED CATALOGUE			
DRAWING NUMBER: SGL113JCAERO2091		SHEET 30 OF 34	REV. B

© J&C AERO EEU LTD. OWN THE COPYRIGHT OF THIS DRAWING AND IT SHALL NOT BE REPRODUCED BY ANY OTHER WITHOUT THE PRIOR WRITTEN PERMISSION

DOC/302 ISSUE 1.0

INTERIOR PLACARDS - 8. PASSENGER SEATS

ITEM	PART NUMBER (OEM PART NUMBER)	PLACARD CONTENT	DESCRIPTION	SIZE (WXH); LETTERS HEIGHT	COLOR INDEX	QUANTITY	NOTE
8.1	JC737E024A01 (BAC29PPS35848)	EMERGENCY EXIT (LEFT)		293X63	4.1 4.4 4.2 4.6 4.3 4.8	6	
8.2	JC737E024A02 (BAC29PPS35847)	EMERGENCY EXIT (RIGHT)		293X63	4.1 4.4 4.2 4.6 4.3 4.8	6	
8.3	JC737E015A71 (N/A)	PLEASE FASTEN SEAT BELT WHILE SEATED	**PLEASE FASTEN SEAT BELT WHILE SEATED** EPA JC737E015A71	122X22 5	4.3 4.7	180	
8.4	JC737E015A72 (N/A)	LIFE VEST UNDER YOUR SEAT	**LIFE VEST UNDER YOUR SEAT** EPA JC737E015A72	122X22 5	4.3 4.7	180	

J&C AERO EEU
EASA APPROVAL NO: EASA.21J.580
WWW.THISISDOA.EU
INFO@THISISDOA.EU
PHONE: +353 15 269768

AIRCRAFT: BOEING 737-800
MSN: 34280, 34281, 28241, 30628
REGISTRATION: -
TOLERANCES: ANGULAR =±5°; DECIMALS X = ±1, X.X = ±0.5, X.XX = ±0.05
SCALE: NTS
SIZE: A2
ALL DIMENSIONS ARE MILLIMETERS
THIRD ANGLE PROJECTION
DRAWN BY: SEE ECN JCAERO/ECN/2091
CHECKED BY: SEE ECN JCAERO/ECN/2091
TITLE: INTERIOR PLACARDS ILLUSTRATED CATALOGUE
DRAWING NUMBER: SGL113JCAERO2091
SHEET 31 OF 34
REV. B

© J&C AERO EEU LTD. OWN THE COPYRIGHT OF THIS DRAWING AND IT SHALL NOT BE REPRODUCED BY ANY OTHER WITHOUT THE PRIOR WRITTEN PERMISSION

DRAWING NUMBER: SGL113JCAERO2091

INTERIOR PLACARDS - 9. PASSENGER CABIN - LOAD LIMIT

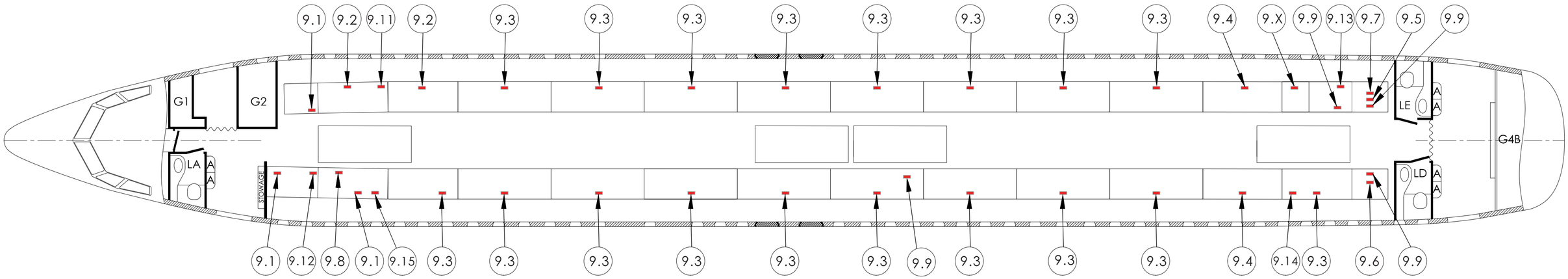

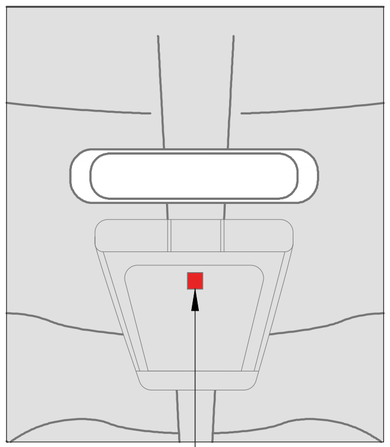

9.8 INSIDE

FORWARD CENTER O/H BIN

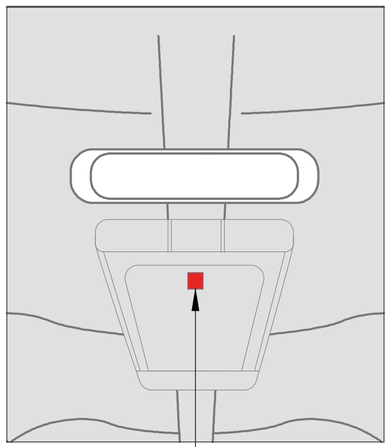

9.8 INSIDE

MID FWD CENTER O/H BIN

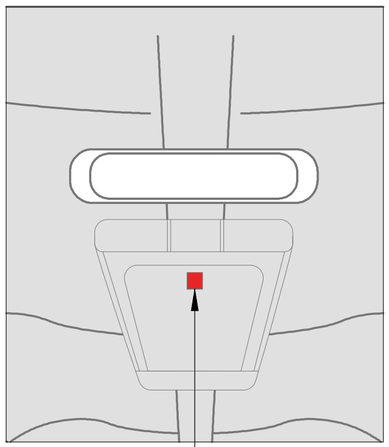

9.8 INSIDE

MID AFT CENTER O/H BIN

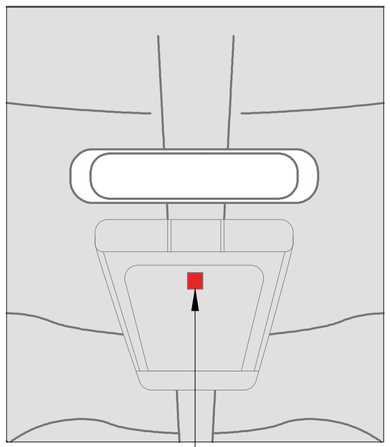

9.8 INSIDE

AFT CENTER O/H BIN

A - REFER TO CURRENT AIPC OR CMM OR TC HOLDER DRAWINGS OR APPROVED MODIFICATION FOR EACH LOAD LIMIT

B - ONLY TYPICAL LOAD LIMIT LOCATIONS ARE SHOWN, LOAD LIMIT PLACARDS CAN BE INSTALLED IN OTHER LOCATION DEPENDING ON AC CONFIGURATION. REFER TO AC CUSTOMIZED DOCUMENTATION FOR LOAD LIMITS AND PLACARDS LOCATION.

J&C AERO EEU
EASA APPROVAL NO: EASA.21J.580

WWW.THISISDOA.EU
INFO@THISISDOA.EU
PHONE: +353 15 269768

AIRCRAFT: BOEING 737-800	TOLERANCES: ANGULAR ±5°; DECIMALS X = ±1, X.X = ±0.5, X.XX = ±0.05		DRAWN BY: SEE ECN JCAERO/ECN/2091
MSN: 34280, 34281, 28241, 30628	REGISTRATION: -	SCALE: NTS / SIZE: A2	ALL DIMENSIONS ARE MILLIMETERS, THIRD ANGLE PROJECTION	CHECKED BY: SEE ECN JCAERO/ECN/2091
TITLE: INTERIOR PLACARDS ILLUSTRATED CATALOGUE			
DRAWING NUMBER: SGL113JCAERO2091		SHEET 32 OF 34	REV. B

© J&C AERO EEU LTD. OWN THE COPYRIGHT OF THIS DRAWING AND IT SHALL NOT BE REPRODUCED BY ANY OTHER WITHOUT THE PRIOR WRITTEN PERMISSION

DOC/302 ISSUE 1.0

INTERIOR PLACARDS - 9. PASSENGER CABIN - LOAD LIMIT

ITEM	PART NUMBER (OEM PART NUMBER)	PLACARD CONTENT	DESCRIPTION	SIZE (WXH); LETTERS HEIGHT	COLOR INDEX	QUANTITY	NOTE
9.1	JC737E021A17 (BAC29PPS64570)	LATCH CLOSED LOAD LIMIT	LATCH CLOSED LOAD LIMIT 58 lb / 26 kg EPA JC737E021A17	75X36 6	4.3 4.7	3	
9.2	JC737E021A28 (BAC29PPS64601)	LATCH CLOSED LOAD LIMIT	LATCH CLOSED LOAD LIMIT 120 lb / 54 kg EPA JC737E021A28	75X36 6	4.3 4.7	3	
9.3	JC737E021A30 (BAC29PPS64621)	LATCH CLOSED LOAD LIMIT	LATCH CLOSED LOAD LIMIT 160 lb / 72 kg EPA JC737E021A30	75X36 6 6	4.3 4.7	18	
9.4	JC737E021A29 (BAC29PPS64611)	LATCH CLOSED LOAD LIMIT	LATCH CLOSED LOAD LIMIT 140 lb / 63 kg EPA JC737E021A29	75X36 6	4.3 4.7	2	
9.5	JC737E021A09 (BAC29PPS64559)	LATCH CLOSED LOAD LIMIT	LATCH CLOSED LOAD LIMIT 36 lb / 16 kg EPA JC737E021A09	75X36 6	4.3 4.7	1	
9.6	JC737E021A19 (BAC29PPS64572)	LATCH CLOSED LOAD LIMIT	LATCH CLOSED LOAD LIMIT 62 lb / 28 kg EPA JC737E021A19	75X36 6	4.3 4.7	1	

© J&C AERO EEU LTD. OWN THE COPYRIGHT OF THIS DRAWING AND IT SHALL NOT BE REPRODUCED BY ANY OTHER WITHOUT THE PRIOR WRITTEN PERMISSION

INTERIOR PLACARDS - 9. PASSENGER CABIN - LOAD LIMIT

ITEM	PART NUMBER (OEM PART NUMBER)	PLACARD CONTENT	DESCRIPTION	SIZE (WXH); LETTERS HEIGHT)	COLOR INDEX	QUANTITY	NOTE
9.7	JC737E032A36 (BAC29PPS36217)	NO STOWAGE	NO STOWAGE EPA JC737E032A36	67X18 5	4.3 4.7	1	
9.8	JC737E021A60 (BAC29PPS39690)	LATCH CLOSED DURING TAXI, TAKEOFF AND LANDING	LATCH CLOSED DURING TAXI, TAKEOFF AND LANDING EPA JC737E021A60	75X45 6	4.3 4.7	4	
9.9	JC737E032A42 (BAC29PPS46336)	LATCH CLOSED	LATCH CLOSED EPA JC737E032A42	67X18 5	4.3 4.7	6	
9.10	RESERVED						
9.11	JC737E021A80	LATCH CLOSED LOAD LIMIT	LATCH CLOSED LOAD LIMIT 22 lb / 10 kg EPA JC737E021A80	75X36 6	4.3 4.7	2	
9.12	JC737E021A06	LATCH CLOSED LOAD LIMIT	LATCH CLOSED LOAD LIMIT 30 lb / 13 kg EPA JC737E021A06	75X36 6	4.3 4.7	2	
9.13	JC737E021A10	LATCH CLOSED LOAD LIMIT	LATCH CLOSED LOAD LIMIT 40 lb / 18 kg EPA JC737E021A10	75X36 6	4.3 4.7	2	
9.14	JC737E021A22	LATCH CLOSED LOAD LIMIT	LATCH CLOSED LOAD LIMIT 80 lb / 36 kg EPA JC737E021A22	75X36 6	4.3 4.7	2	
9.15	JC737E021A24	LATCH CLOSED LOAD LIMIT	LATCH CLOSED LOAD LIMIT 88 lb / 39 kg EPA JC737E021A24	75X36 6	4.3 4.7	2	

© J&C AERO EEU LTD. OWN THE COPYRIGHT OF THIS DRAWING AND IT SHALL NOT BE REPRODUCED BY ANY OTHER WITHOUT THE PRIOR WRITTEN PERMISSION